US009066667B1

(12) **United States Patent**
Berme et al.

(10) **Patent No.: US 9,066,667 B1**
(45) **Date of Patent: Jun. 30, 2015**

(54) **SYSTEM AND METHOD FOR TESTING DYNAMIC VISUAL ACUITY AND/OR GAZE STABILIZATION**

(71) Applicant: **Bertec Corporation**, Columbus, OH (US)

(72) Inventors: **Necip Berme**, Worthington, OH (US); **Kamran Barin**, Columbus, OH (US); **Daniel James Petit**, Columbus, OH (US)

(73) Assignee: **Bertec Corporation**, Columbus, OH (US)

(*) Notice: Subject to any disclaimer, the term of this patent is extended or adjusted under 35 U.S.C. 154(b) by 0 days.

(21) Appl. No.: **14/535,117**

(22) Filed: **Nov. 6, 2014**

(51) **Int. Cl.**
A61B 3/02 (2006.01)
A61B 3/00 (2006.01)
A61B 3/032 (2006.01)

(52) **U.S. Cl.**
CPC ***A61B 3/032*** (2013.01); ***A61B 3/0033*** (2013.01)

(58) **Field of Classification Search**
CPC A61B 3/0091; A61B 3/02; A61B 3/032; A61B 3/036; A61B 3/11; A61B 3/113; A61B 3/145; A61H 5/005
USPC 351/238, 200, 203–206, 208–211, 214, 351/221, 222, 233, 236, 243–246
See application file for complete search history.

(56) **References Cited**

U.S. PATENT DOCUMENTS

6,038,488 A 3/2000 Barnes et al.
6,113,237 A 9/2000 Ober et al.
6,152,564 A 11/2000 Ober et al.
6,295,878 B1 10/2001 Berme
6,354,155 B1 3/2002 Berme
6,389,883 B1 5/2002 Berme et al.
6,936,016 B2 8/2005 Berme et al.
7,195,355 B2 3/2007 Nashner
7,500,752 B2 3/2009 Nashner
8,181,541 B2 5/2012 Berme
8,315,822 B2 11/2012 Berme et al.
8,315,823 B2 11/2012 Berme et al.
D689,388 S 9/2013 Berme

(Continued)

OTHER PUBLICATIONS

Herdman, Susan J. et al., "Computerized Dynamic Visual Acuity Test in the Assessment of Vestibular Deficits", The American Journal of Otology, Inc., vol. 19, No. 6, 1998, pp. 790-796.

(Continued)

Primary Examiner — Stephone B Allen
Assistant Examiner — Brandi Thomas
(74) *Attorney, Agent, or Firm* — The Law Office of Patrick F. O'Reilly III, LLC

(57) **ABSTRACT**

A system for testing the vision of a subject is disclosed herein. The system includes a motion sensing device, the motion sensing device configured to measure a velocity or speed of a head of a subject; a visual display device having an output screen, the visual display device configured to display one or more visual objects on the output screen so that the one or more visual objects are visible to the subject; and a data processing device, the data processing device operatively coupled to the motion sensing device and the visual display device, the data processing device being specially programmed to carry out the steps of the vision tests. A method for the testing the vision of a subject is also disclosed herein. The vision tests may assess the dynamic visual acuity and/or the gaze stabilization of the subject.

26 Claims, 32 Drawing Sheets

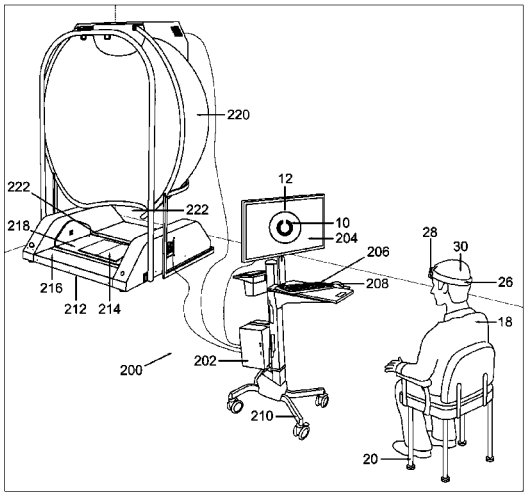

(56) **References Cited**

U.S. PATENT DOCUMENTS

D689,389	S	9/2013	Berme	
8,543,540	B1	9/2013	Wilson et al.	
8,544,347	B1	10/2013	Berme	
8,643,669	B1	2/2014	Wilson et al.	
8,700,569	B1	4/2014	Wilson et al.	
8,704,855	B1	4/2014	Berme et al.	
8,764,532	B1	7/2014	Berme	
8,847,989	B1 *	9/2014	Berme et al.	345/633
D715,669	S	10/2014	Berme	
8,902,249	B1	12/2014	Wilson et al.	
2003/0216656	A1	11/2003	Berme et al.	
2008/0228110	A1	9/2008	Berme	
2011/0277562	A1	11/2011	Berme	
2012/0266648	A1	10/2012	Berme et al.	
2012/0271565	A1	10/2012	Berme et al.	
2014/0313488	A1 *	10/2014	Kiderman et al.	351/246

OTHER PUBLICATIONS

Grassi, Massimo et al., "MLP: MATLAB toolbox for rapid and reliable auditory threshold estimation", Behavior Research Methods, 2009, 41(1), pp. 20-28.

* cited by examiner

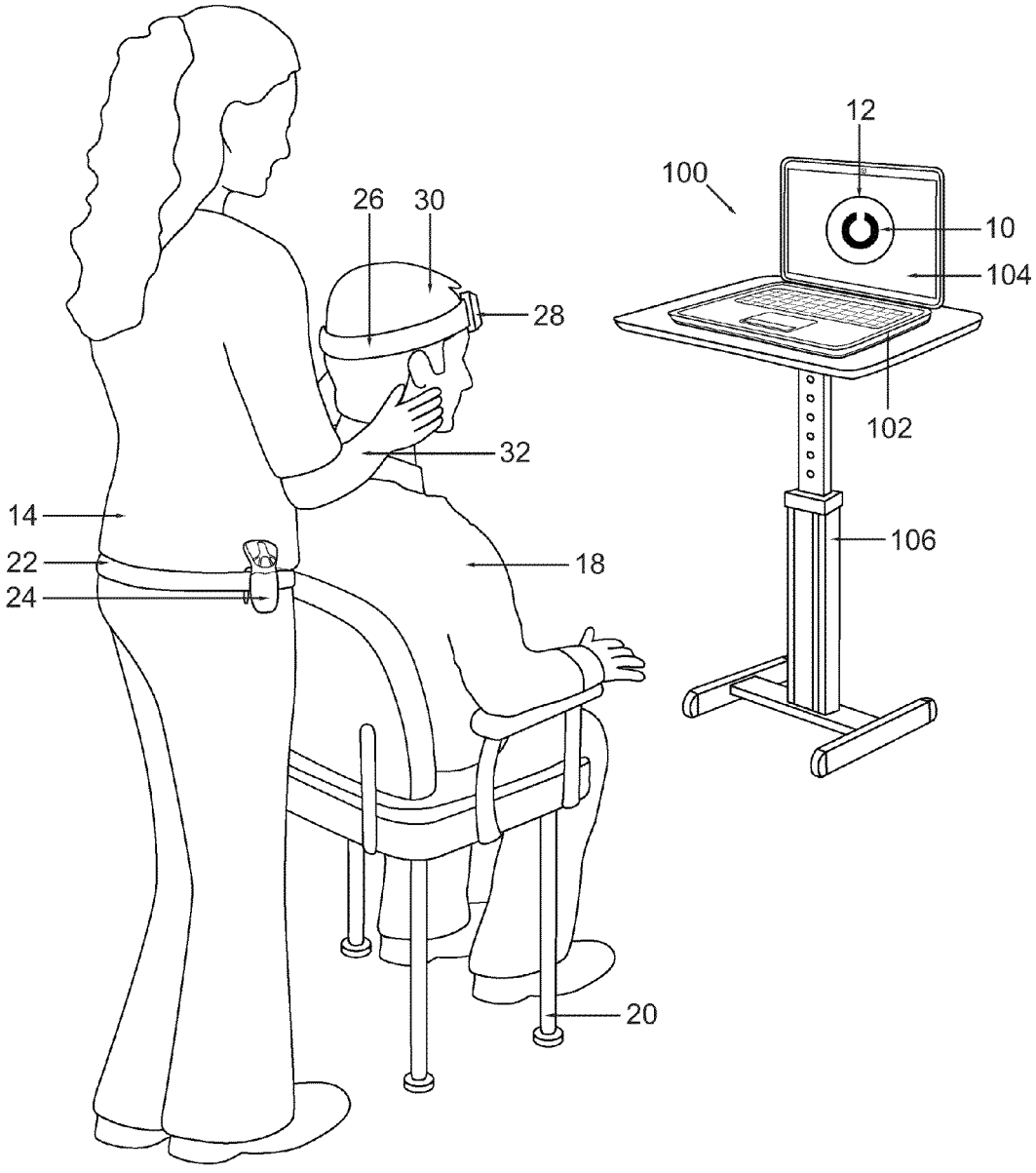

FIG. 1

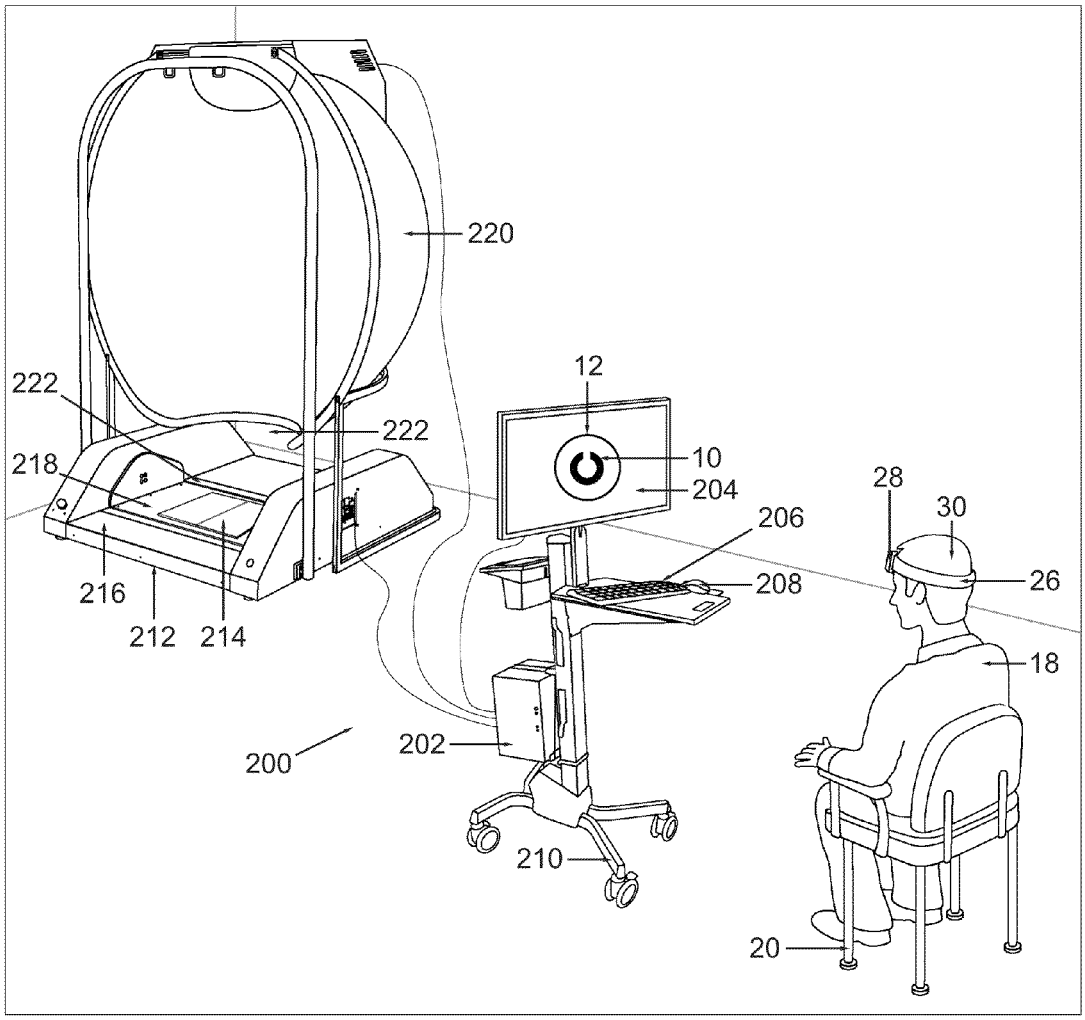
220
222
222
218
216
212
214
12
10
204
206
208
28
30
26
18
200
202
210
20

FIG. 2

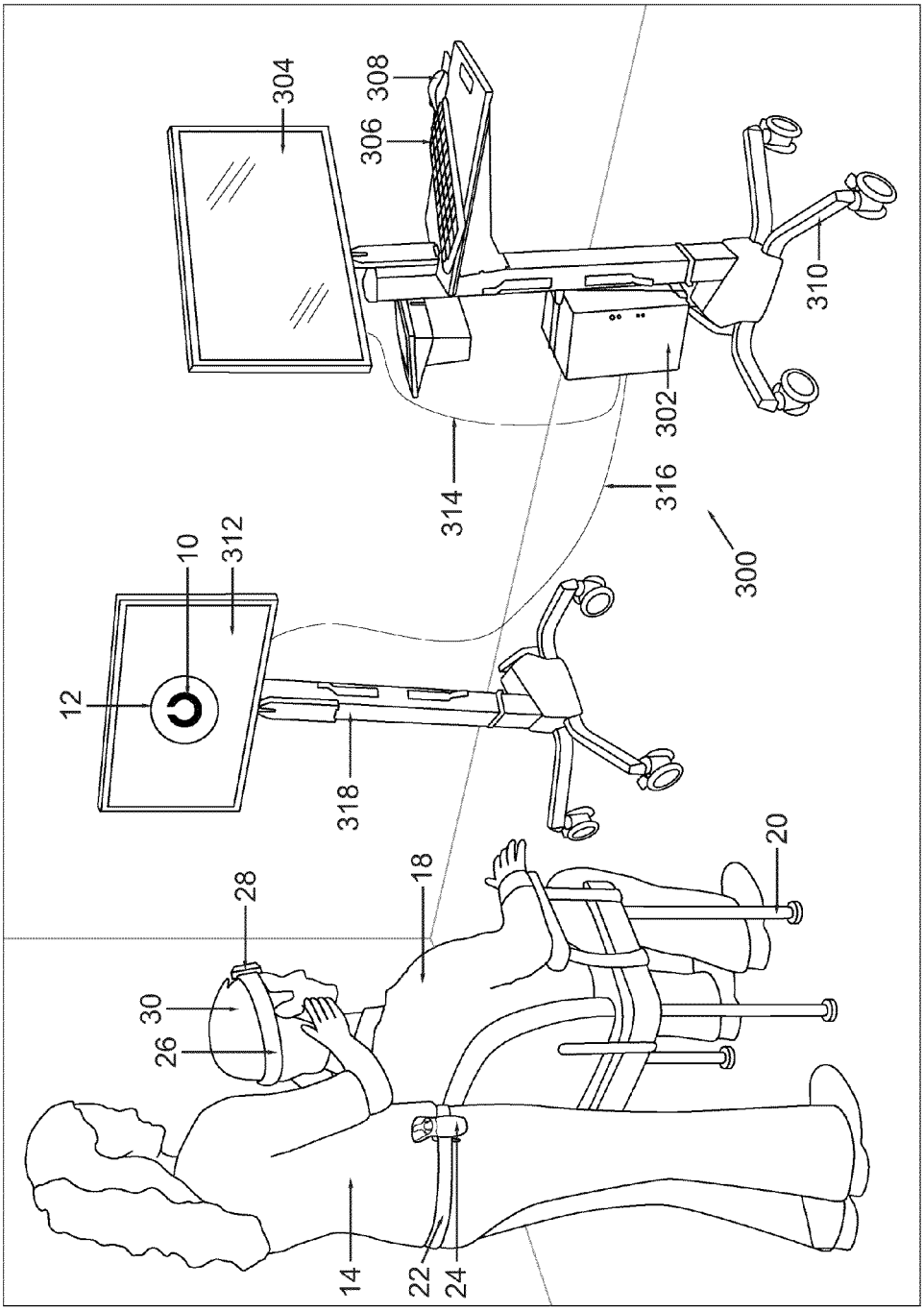
304
308
306
310
302
314
316
300
10
312
12
318
20
18
28
30
26
14
22
24

FIG. 3

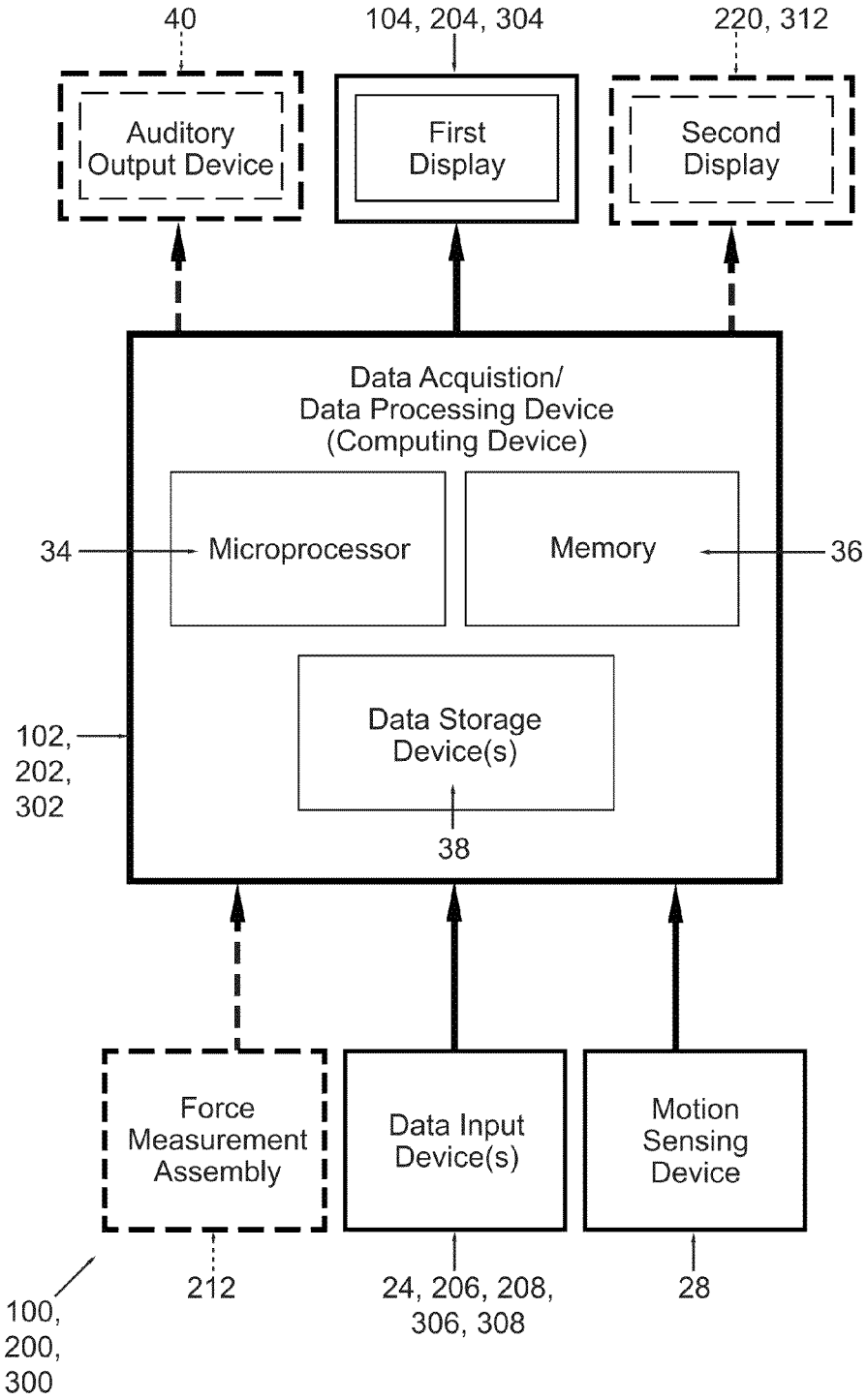
40
104, 204, 304
220, 312
Auditory Output Device
First Display
Second Display
Data Acquistion/
Data Processing Device
(Computing Device)
34
Microprocessor
Memory
36
Data Storage Device(s)
102, 202, 302
38
Force Measurement Assembly
Data Input Device(s)
Motion Sensing Device
100, 200, 300
212
24, 206, 208, 306, 308
28

FIG. 4

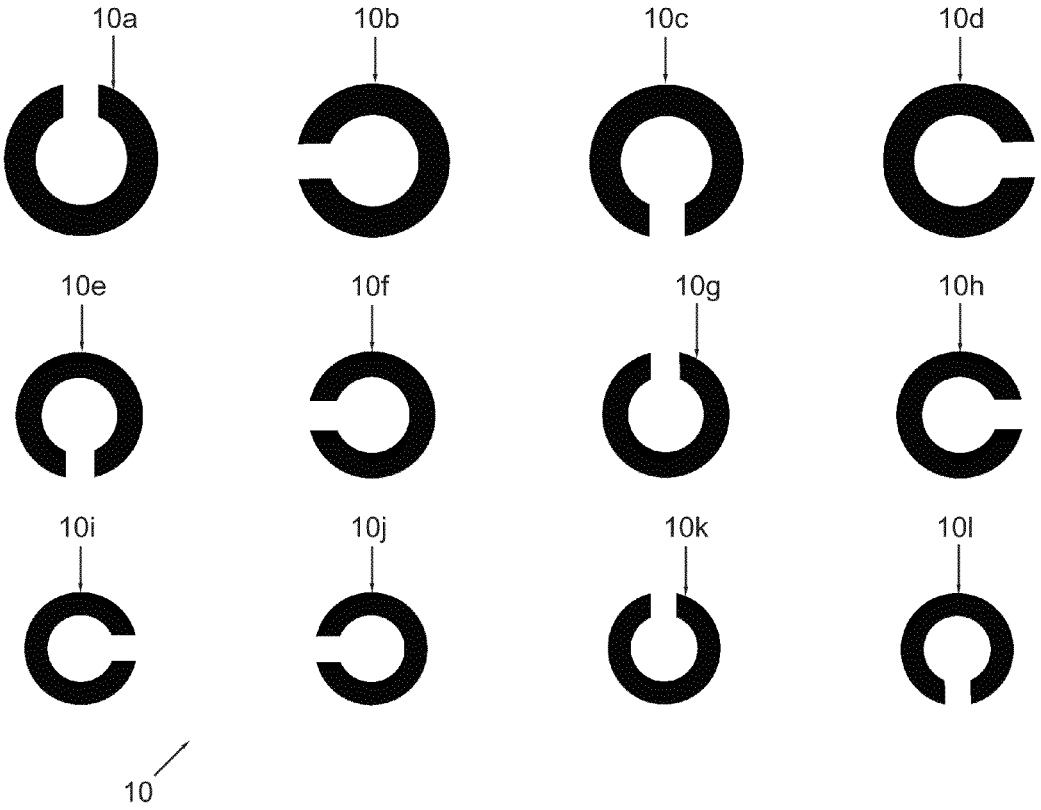

FIG. 5

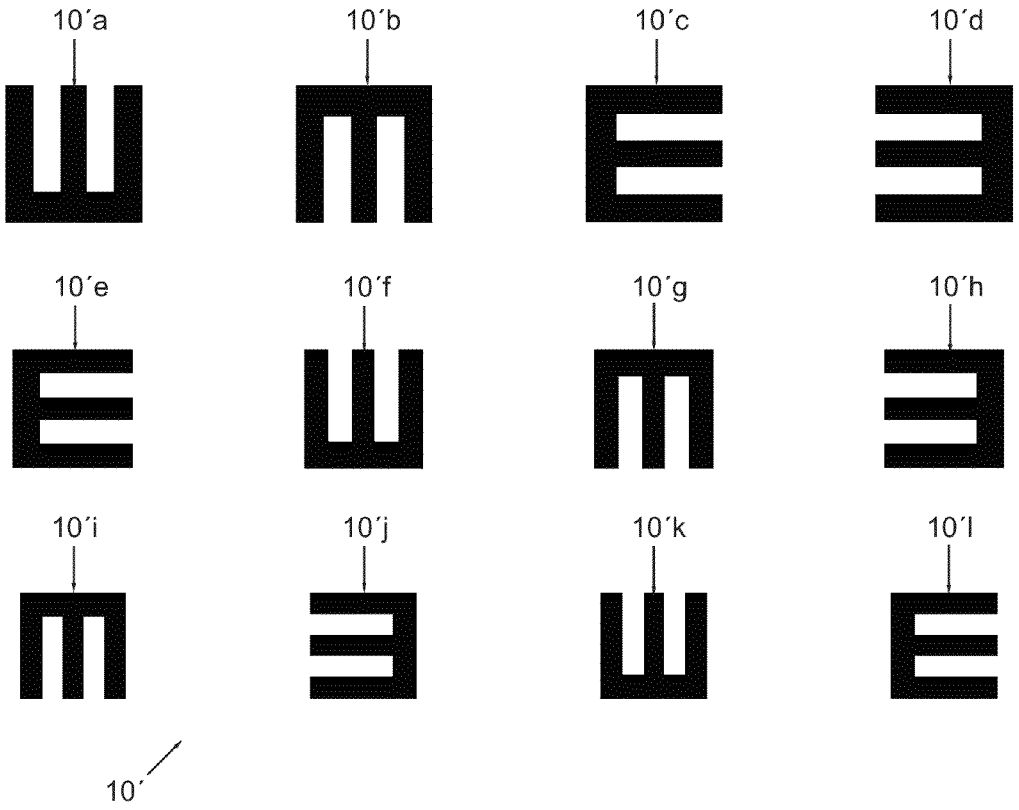

FIG. 6

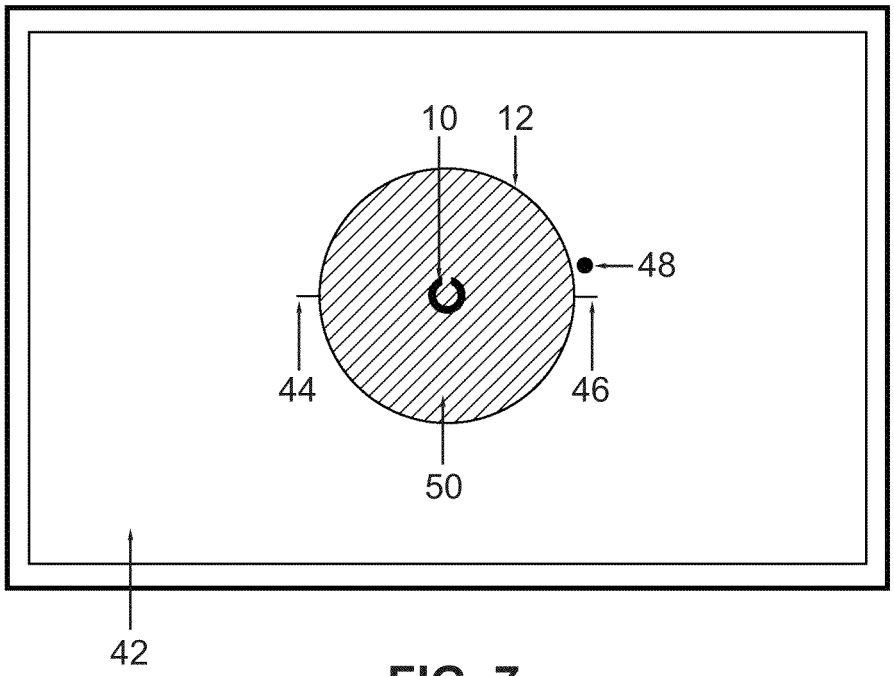

FIG. 7

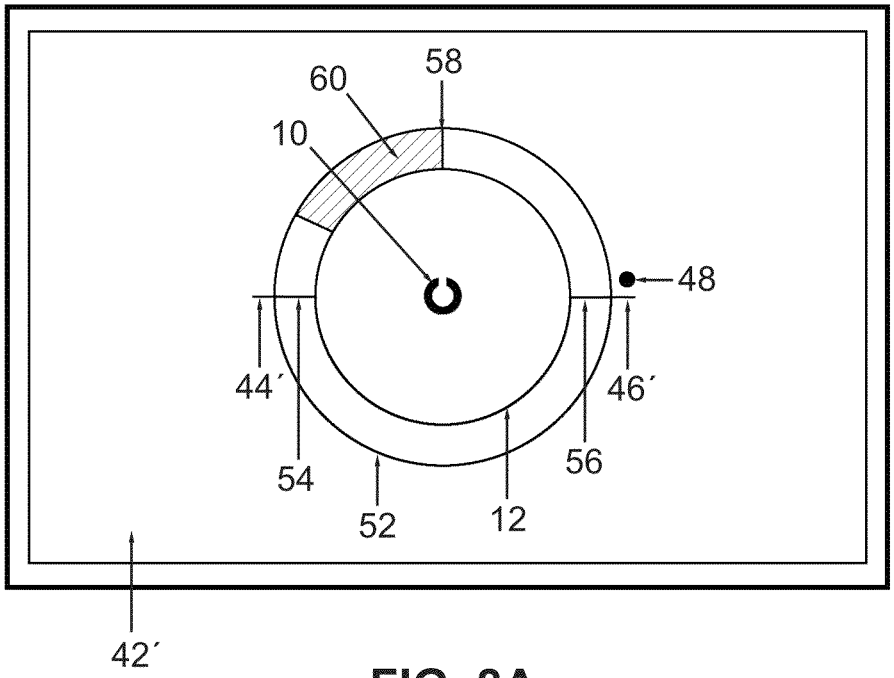

FIG. 8A

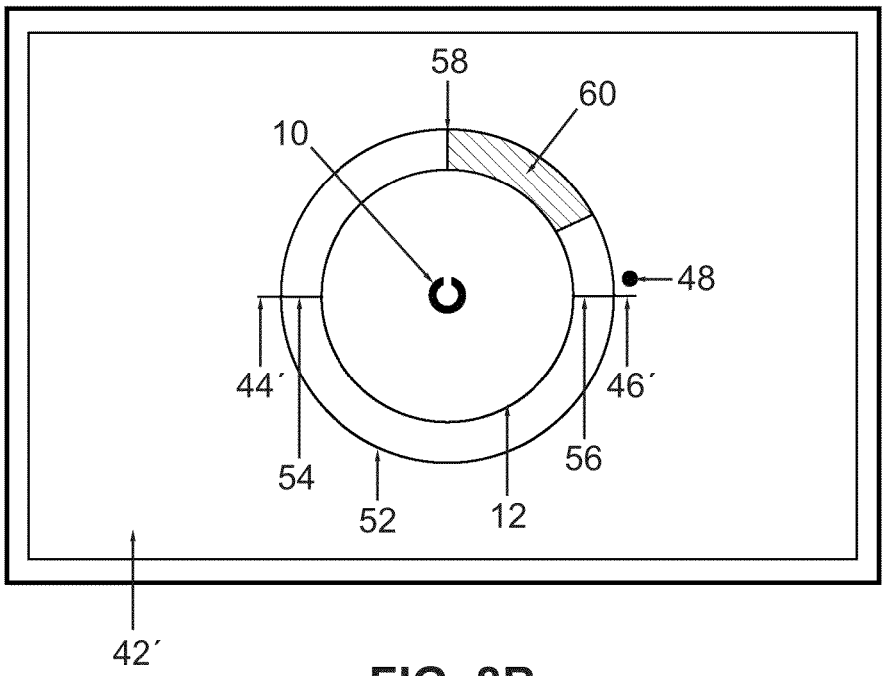

FIG. 8B

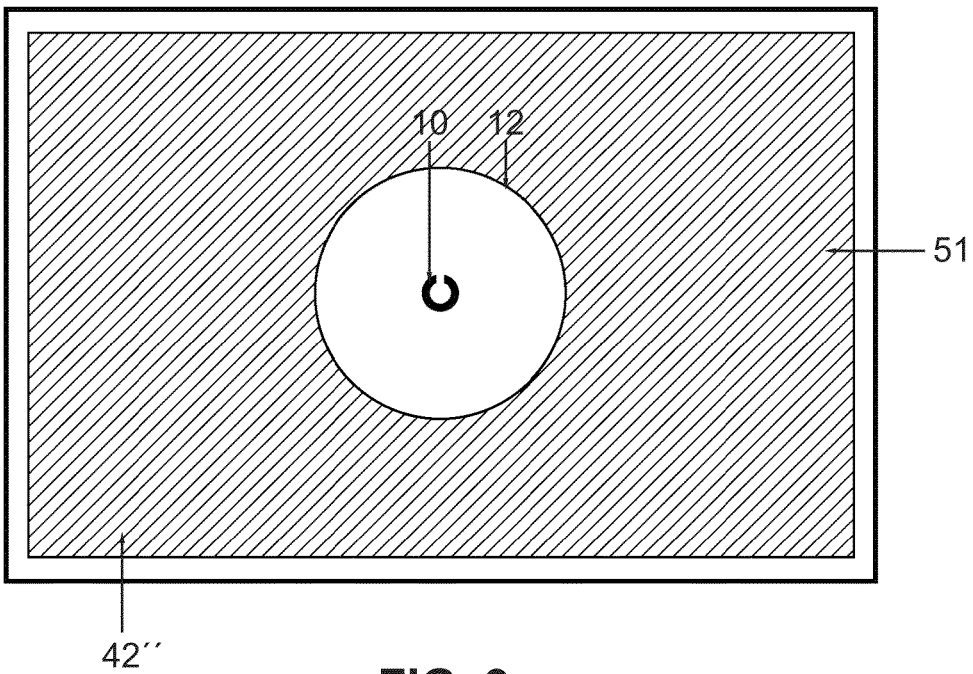

FIG. 9

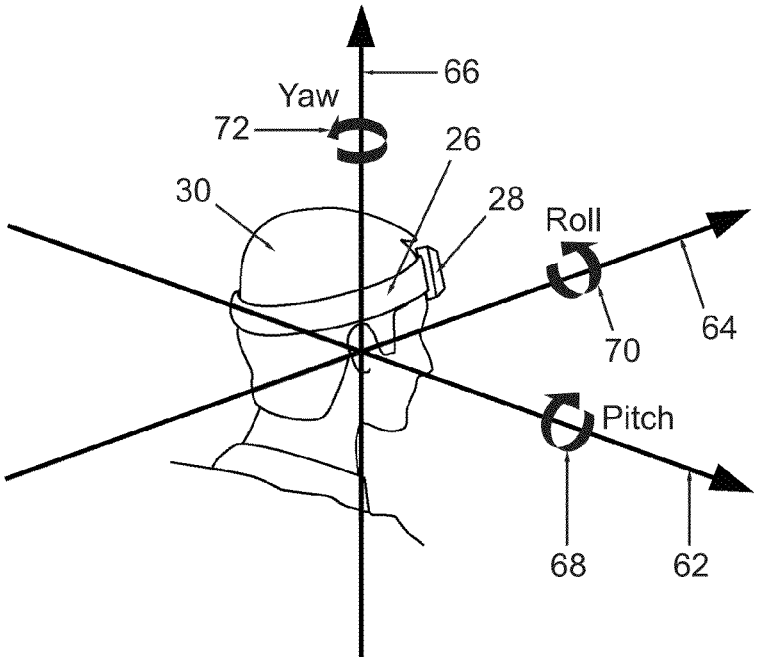

FIG. 10

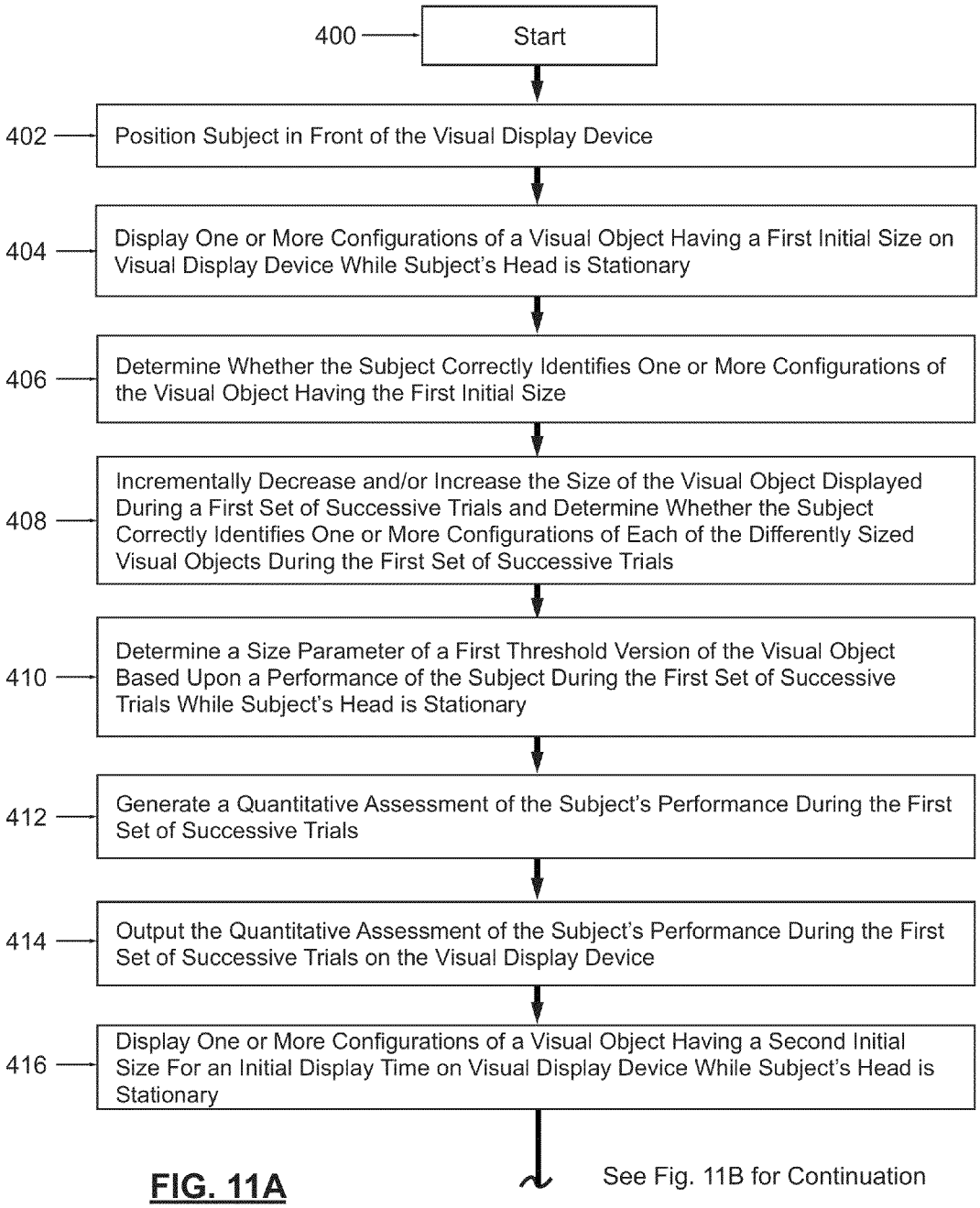
400
Start
402
Position Subject in Front of the Visual Display Device
404
Display One or More Configurations of a Visual Object Having a First Initial Size on Visual Display Device While Subject's Head is Stationary
406
Determine Whether the Subject Correctly Identifies One or More Configurations of the Visual Object Having the First Initial Size
408
Incrementally Decrease and/or Increase the Size of the Visual Object Displayed During a First Set of Successive Trials and Determine Whether the Subject Correctly Identifies One or More Configurations of Each of the Differently Sized Visual Objects During the First Set of Successive Trials
410
Determine a Size Parameter of a First Threshold Version of the Visual Object Based Upon a Performance of the Subject During the First Set of Successive Trials While Subject's Head is Stationary
412
Generate a Quantitative Assessment of the Subject's Performance During the First Set of Successive Trials
414
Output the Quantitative Assessment of the Subject's Performance During the First Set of Successive Trials on the Visual Display Device
416
Display One or More Configurations of a Visual Object Having a Second Initial Size For an Initial Display Time on Visual Display Device While Subject's Head is Stationary
See Fig. 11B for Continuation

FIG. 11A

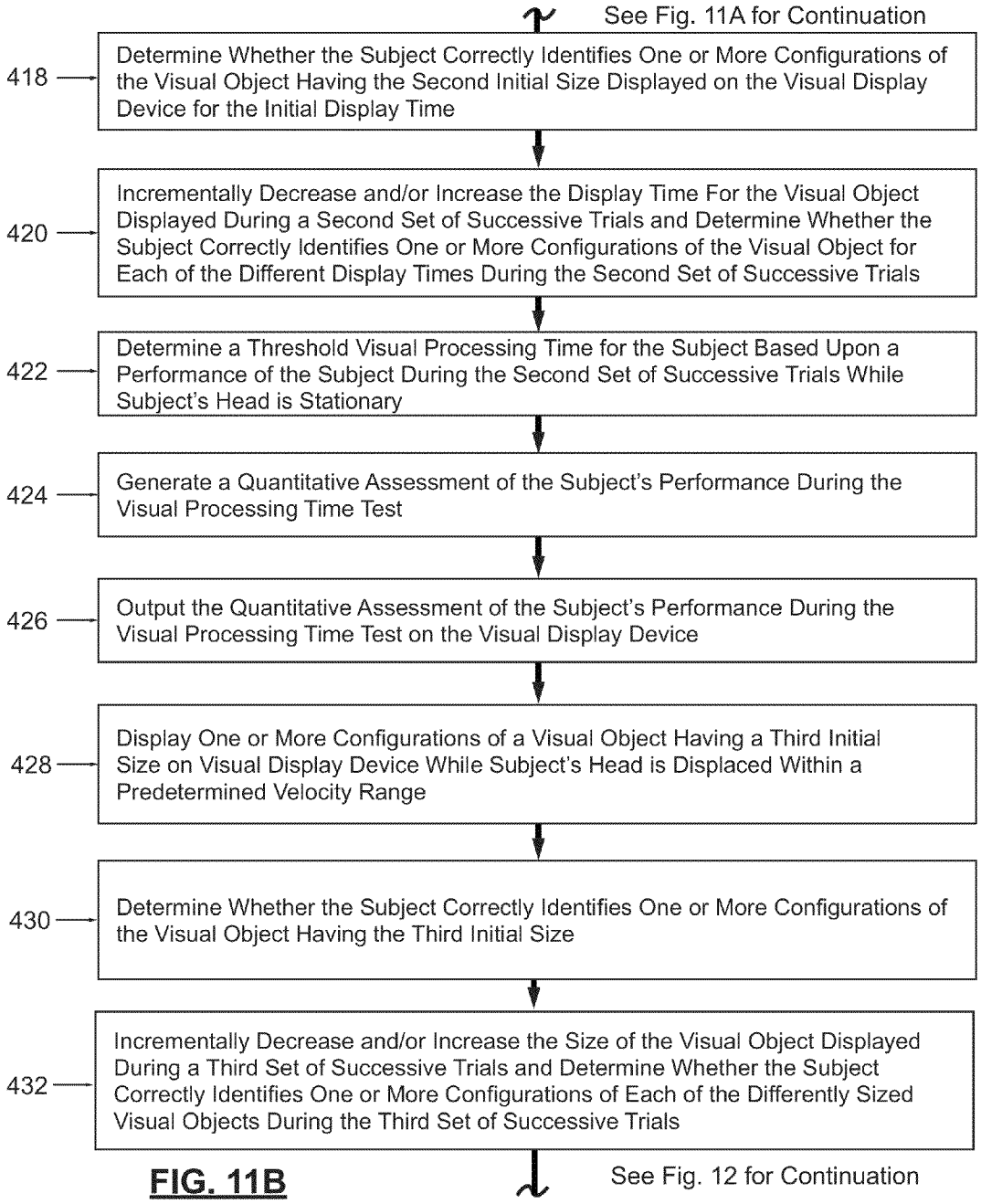
See Fig. 11A for Continuation
418
Determine Whether the Subject Correctly Identifies One or More Configurations of the Visual Object Having the Second Initial Size Displayed on the Visual Display Device for the Initial Display Time
420
Incrementally Decrease and/or Increase the Display Time For the Visual Object Displayed During a Second Set of Successive Trials and Determine Whether the Subject Correctly Identifies One or More Configurations of the Visual Object for Each of the Different Display Times During the Second Set of Successive Trials
422
Determine a Threshold Visual Processing Time for the Subject Based Upon a Performance of the Subject During the Second Set of Successive Trials While Subject's Head is Stationary
424
Generate a Quantitative Assessment of the Subject's Performance During the Visual Processing Time Test
426
Output the Quantitative Assessment of the Subject's Performance During the Visual Processing Time Test on the Visual Display Device
428
Display One or More Configurations of a Visual Object Having a Third Initial Size on Visual Display Device While Subject's Head is Displaced Within a Predetermined Velocity Range
430
Determine Whether the Subject Correctly Identifies One or More Configurations of the Visual Object Having the Third Initial Size
432
Incrementally Decrease and/or Increase the Size of the Visual Object Displayed During a Third Set of Successive Trials and Determine Whether the Subject Correctly Identifies One or More Configurations of Each of the Differently Sized Visual Objects During the Third Set of Successive Trials
See Fig. 12 for Continuation

FIG. 11B

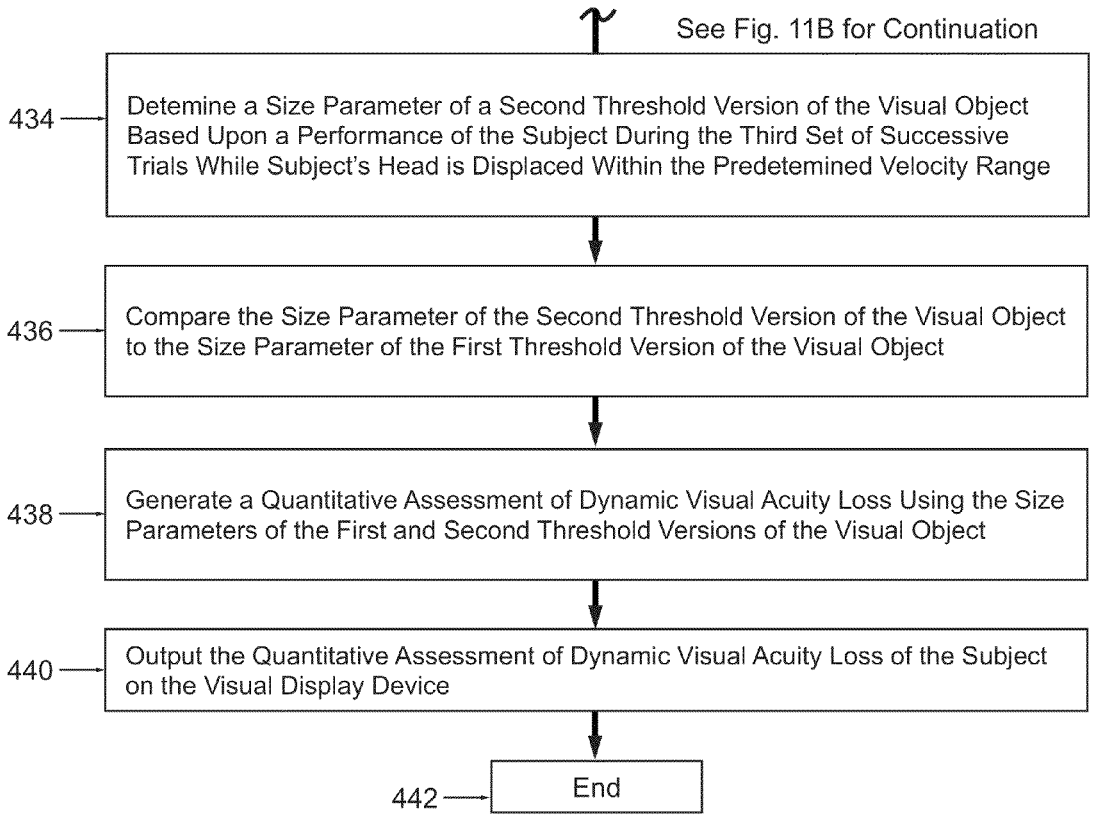
See Fig. 11B for Continuation
434
Detemine a Size Parameter of a Second Threshold Version of the Visual Object Based Upon a Performance of the Subject During the Third Set of Successive Trials While Subject's Head is Displaced Within the Predetemined Velocity Range
436
Compare the Size Parameter of the Second Threshold Version of the Visual Object to the Size Parameter of the First Threshold Version of the Visual Object
438
Generate a Quantitative Assessment of Dynamic Visual Acuity Loss Using the Size Parameters of the First and Second Threshold Versions of the Visual Object
440
Output the Quantitative Assessment of Dynamic Visual Acuity Loss of the Subject on the Visual Display Device
442
End

FIG. 12

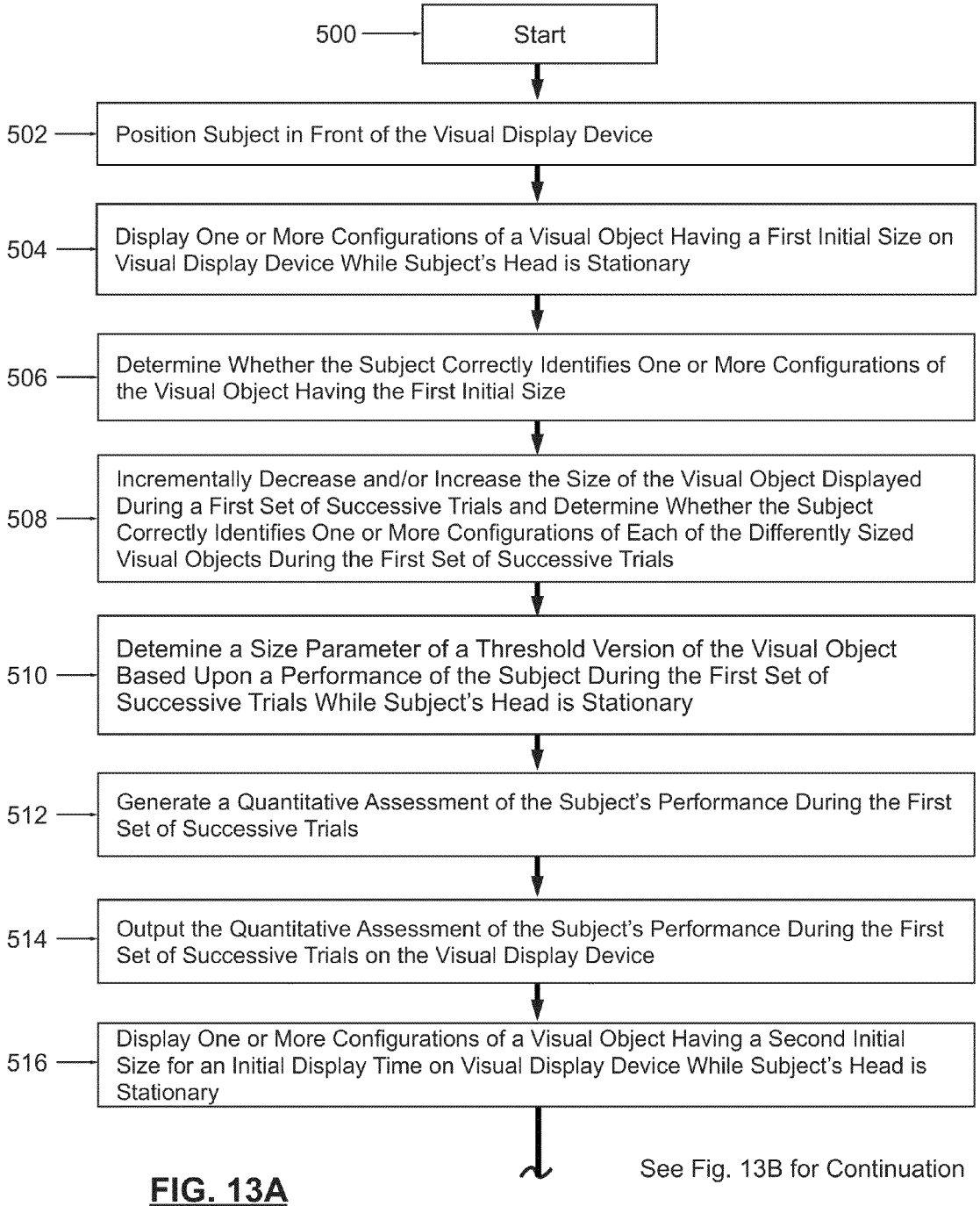
500
Start
502
Position Subject in Front of the Visual Display Device
504
Display One or More Configurations of a Visual Object Having a First Initial Size on Visual Display Device While Subject's Head is Stationary
506
Determine Whether the Subject Correctly Identifies One or More Configurations of the Visual Object Having the First Initial Size
508
Incrementally Decrease and/or Increase the Size of the Visual Object Displayed During a First Set of Successive Trials and Determine Whether the Subject Correctly Identifies One or More Configurations of Each of the Differently Sized Visual Objects During the First Set of Successive Trials
510
Detemine a Size Parameter of a Threshold Version of the Visual Object Based Upon a Performance of the Subject During the First Set of Successive Trials While Subject's Head is Stationary
512
Generate a Quantitative Assessment of the Subject's Performance During the First Set of Successive Trials
514
Output the Quantitative Assessment of the Subject's Performance During the First Set of Successive Trials on the Visual Display Device
516
Display One or More Configurations of a Visual Object Having a Second Initial Size for an Initial Display Time on Visual Display Device While Subject's Head is Stationary
See Fig. 13B for Continuation

FIG. 13A

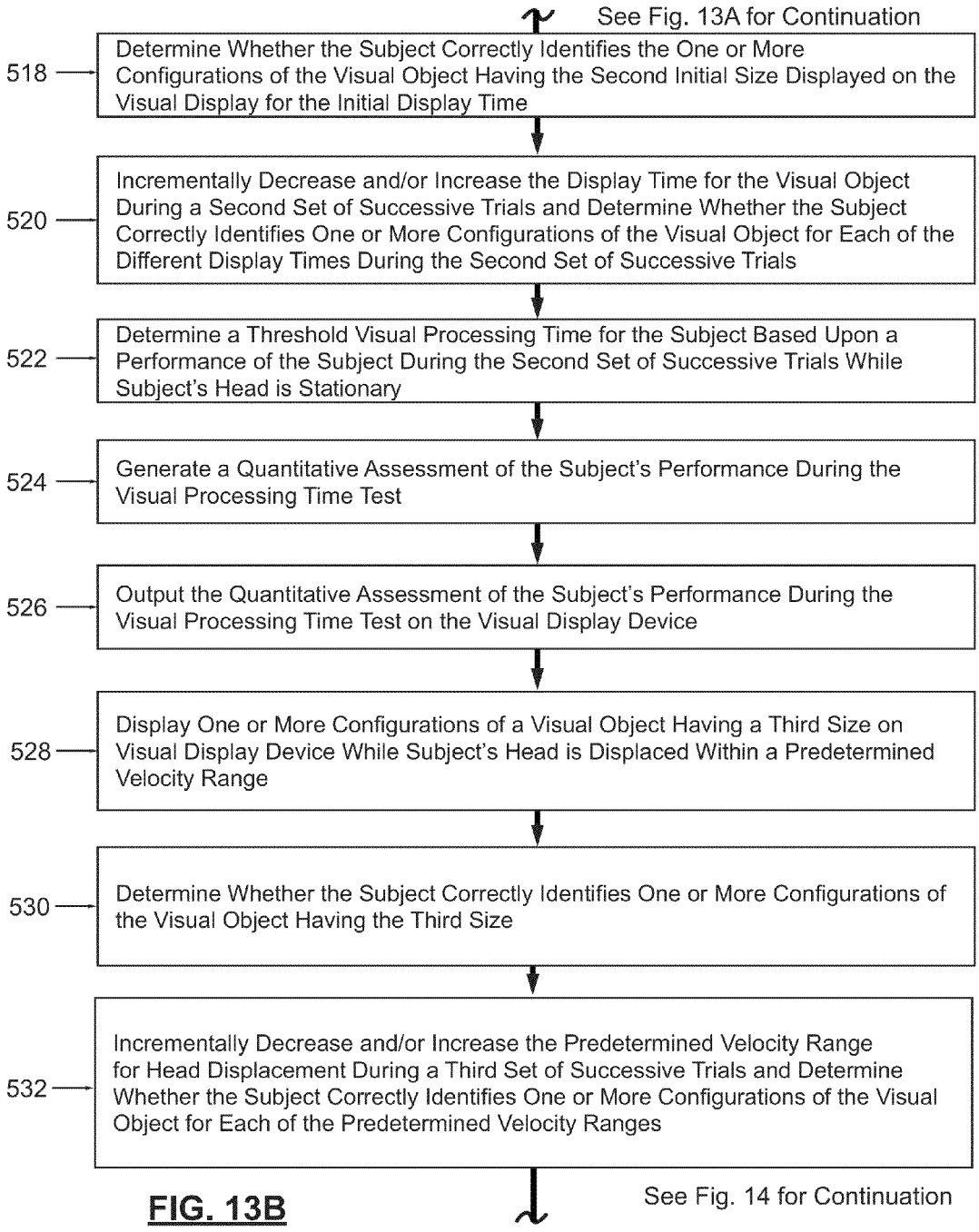
See Fig. 13A for Continuation
518
Determine Whether the Subject Correctly Identifies the One or More Configurations of the Visual Object Having the Second Initial Size Displayed on the Visual Display for the Initial Display Time
520
Incrementally Decrease and/or Increase the Display Time for the Visual Object During a Second Set of Successive Trials and Determine Whether the Subject Correctly Identifies One or More Configurations of the Visual Object for Each of the Different Display Times During the Second Set of Successive Trials
522
Determine a Threshold Visual Processing Time for the Subject Based Upon a Performance of the Subject During the Second Set of Successive Trials While Subject's Head is Stationary
524
Generate a Quantitative Assessment of the Subject's Performance During the Visual Processing Time Test
526
Output the Quantitative Assessment of the Subject's Performance During the Visual Processing Time Test on the Visual Display Device
528
Display One or More Configurations of a Visual Object Having a Third Size on Visual Display Device While Subject's Head is Displaced Within a Predetermined Velocity Range
530
Determine Whether the Subject Correctly Identifies One or More Configurations of the Visual Object Having the Third Size
532
Incrementally Decrease and/or Increase the Predetermined Velocity Range for Head Displacement During a Third Set of Successive Trials and Determine Whether the Subject Correctly Identifies One or More Configurations of the Visual Object for Each of the Predetermined Velocity Ranges
See Fig. 14 for Continuation

FIG. 13B

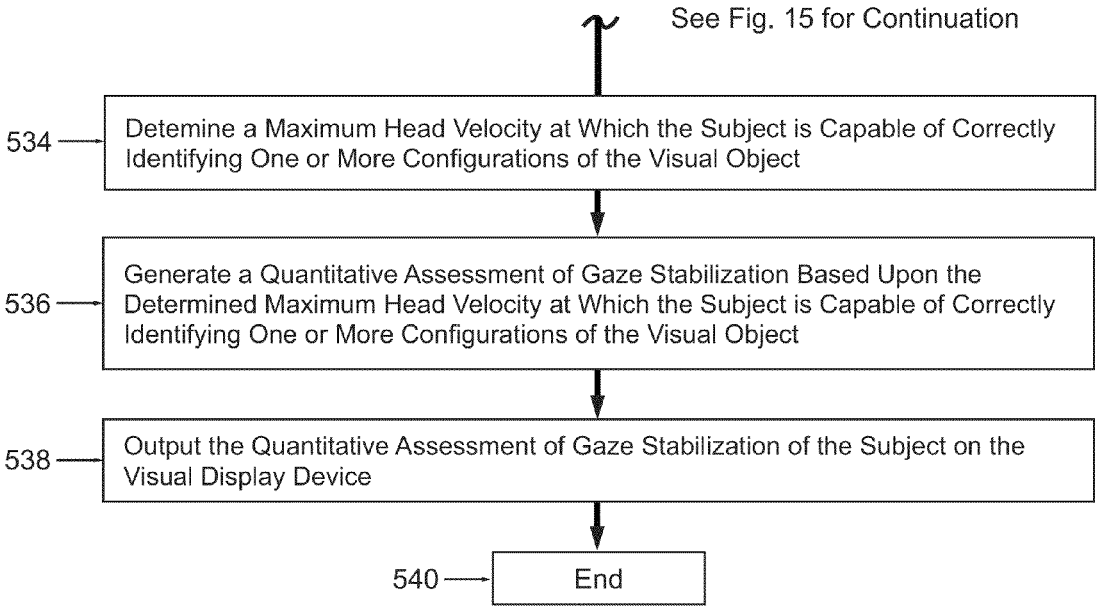
See Fig. 15 for Continuation
534
Detemine a Maximum Head Velocity at Which the Subject is Capable of Correctly Identifying One or More Configurations of the Visual Object
536
Generate a Quantitative Assessment of Gaze Stabilization Based Upon the Determined Maximum Head Velocity at Which the Subject is Capable of Correctly Identifying One or More Configurations of the Visual Object
538
Output the Quantitative Assessment of Gaze Stabilization of the Subject on the Visual Display Device
540
End

FIG. 14

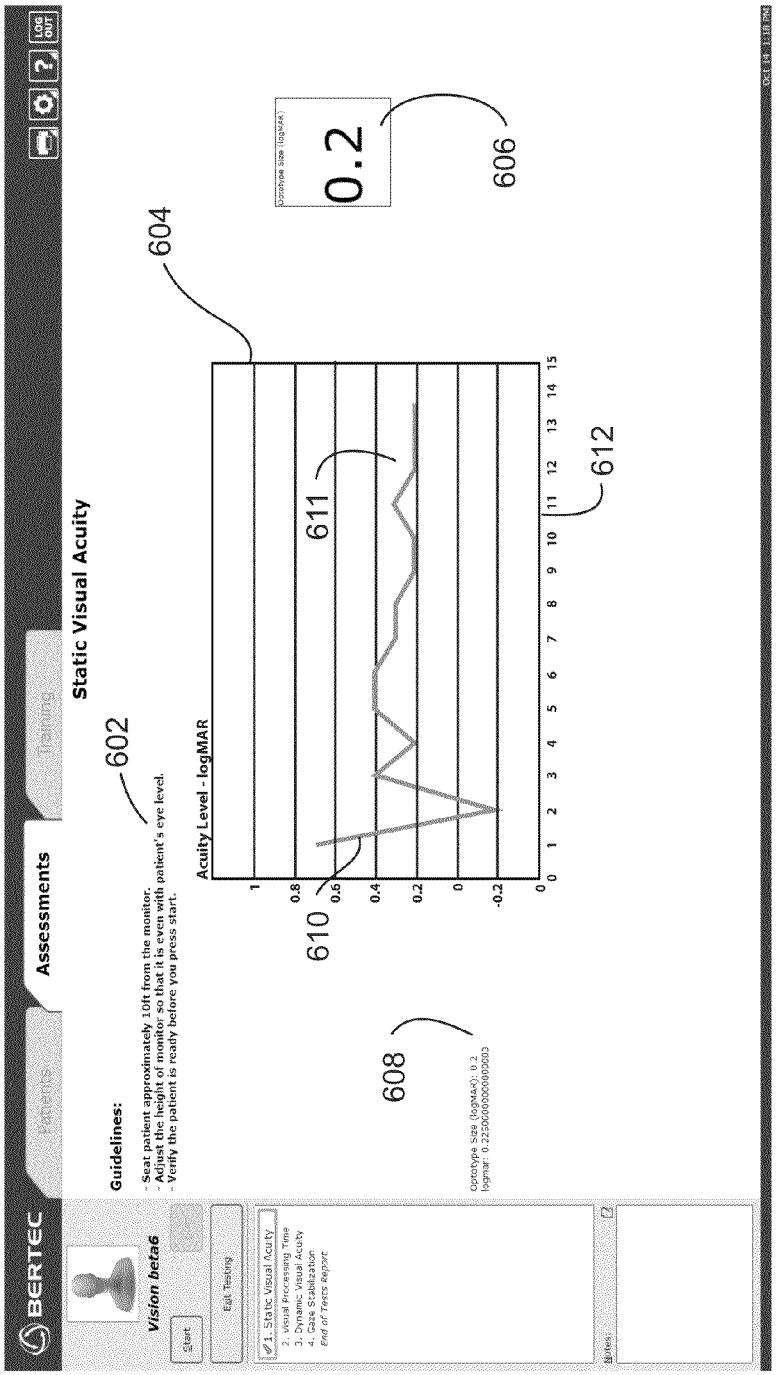
BERTEC
Patients
Assessments
Training
LOG OUT
Vision beta6
Start
Exit Testing
1. Static Visual Acuity
2. Visual Processing Time
3. Dynamic Visual Acuity
4. Gaze Stabilization
End of Tests Report
Guidelines:
- Seat patient approximately 10ft from the monitor.
- Adjust the height of monitor so that it is even with patient's eye level.
- Verify the patient is ready before you press start.
Static Visual Acuity
Acuity Level - logMAR
0 1 2 3 4 5 6 7 8 9 10 11 12 13 14 15
1
0.8
0.6
0.4
0.2
0
-0.2
Optotype Size (logMAR)
0.2
Optotype Size (logMAR): 0.2
logmar: 0.225000000000003
Notes:
602
604
606
608
610
611
612
600

FIG. 15

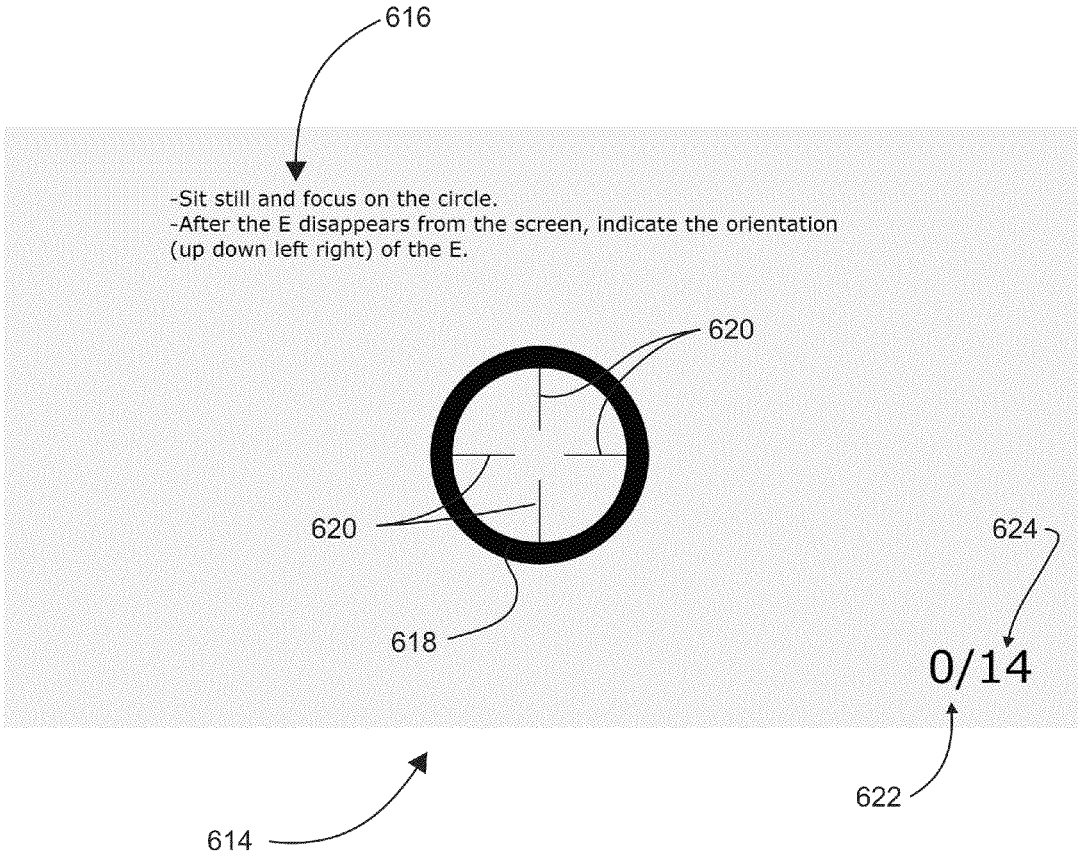
616
-Sit still and focus on the circle.
-After the E disappears from the screen, indicate the orientation (up down left right) of the E.
620
620
618
624
0/14
622
614

FIG. 16

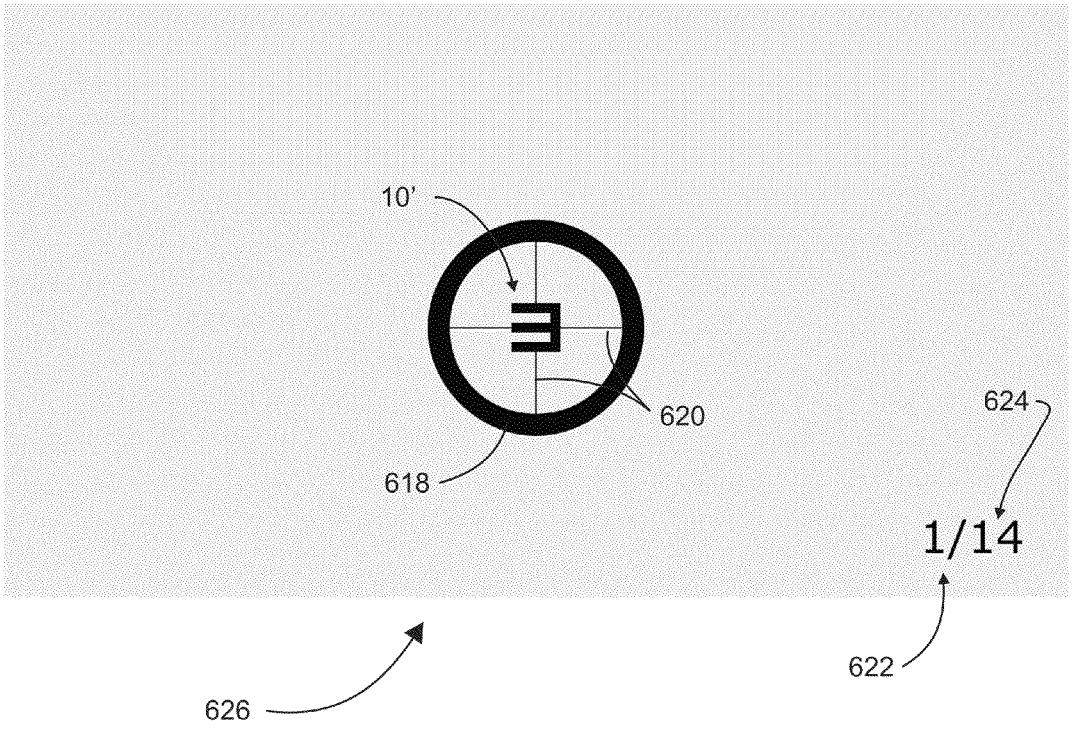

FIG. 17

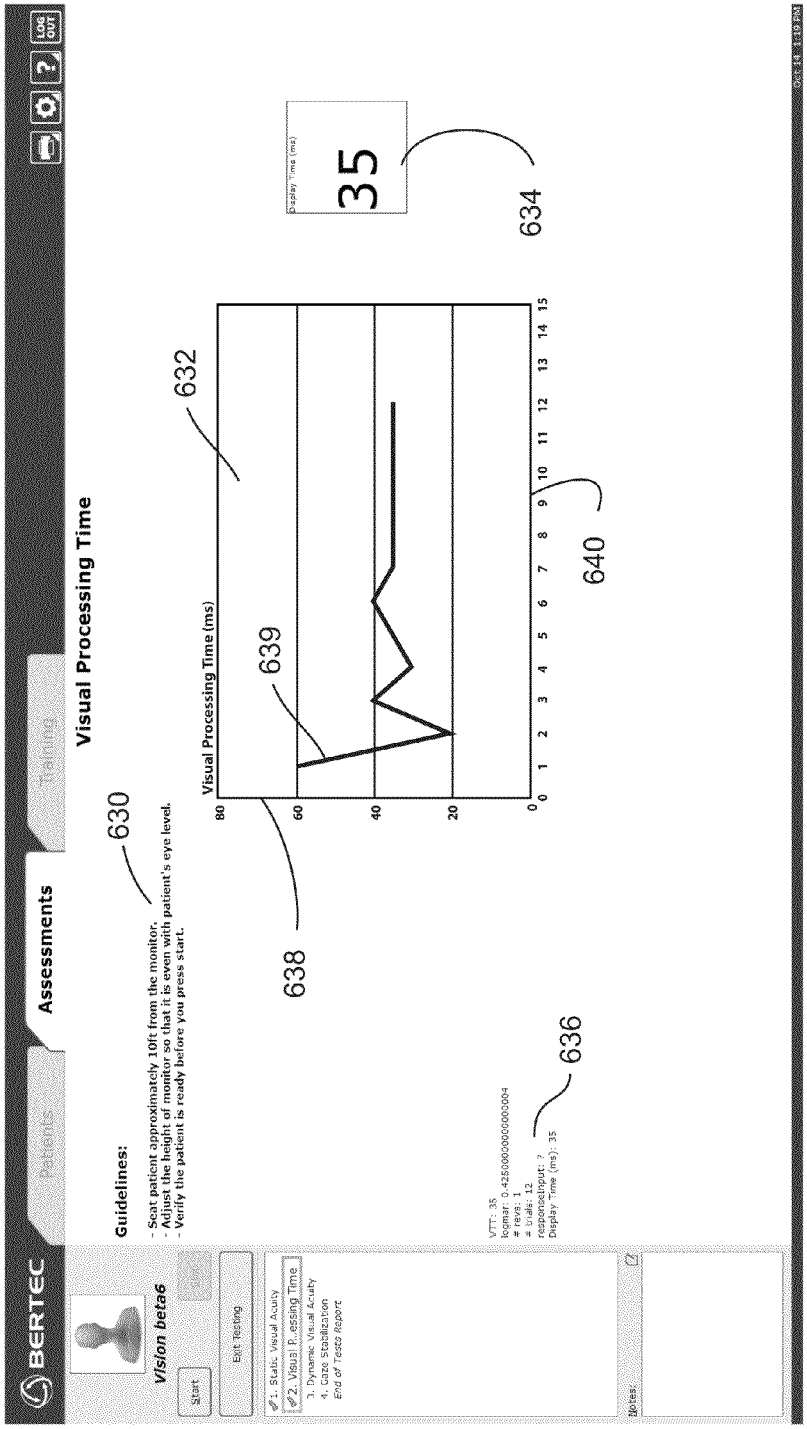
BERTEC
Patients
Assessments
Training
Vision beta6
Start
Exit Testing
1. Static Visual Acuity
2. Visual P...essing Time
3. Dynamic Visual Acuity
4. Gaze Stabilization
End of Tests Report
Notes:
Visual Processing Time
Guidelines:
- Seat patient approximately 10ft from the monitor.
- Adjust the height of monitor so that it is even with patient's eye level.
- Verify the patient is ready before you press start.
VTT: 35
logmar: 0.425000000000004
revs: 1
trials: 12
responseInput: ?
Display Time (ms): 35
Visual Processing Time (ms)
0 1 2 3 4 5 6 7 8 9 10 11 12 13 14 15
20 40 60 80
Display Time (ms)
35
630
632
634
636
638
639
640
628

FIG. 18

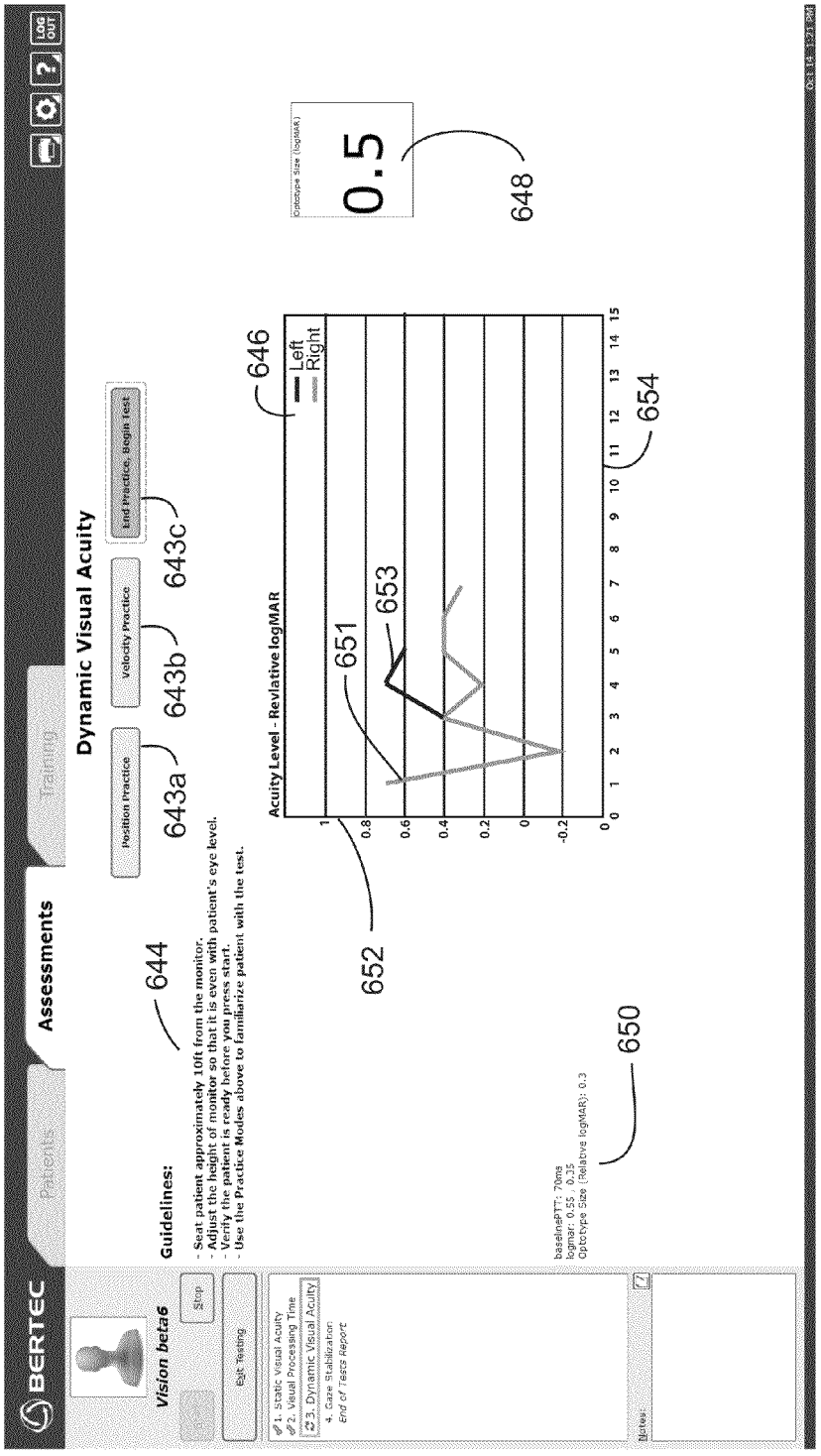
BERTEC
Patients
Assessments
Training
LOG OUT
Vision beta6
Stop
Edit Testing
1. Static Visual Acuity
2. Visual Processing Time
3. Dynamic Visual Acuity
4. Gaze Stabilization
End of Tests Report
Notes:
Dynamic Visual Acuity
Position Practice
Velocity Practice
End Practice, Begin Test
643a
643b
643c
644
Guidelines:
- Seat patient approximately 10ft from the monitor.
- Adjust the height of monitor so that it is even with patient's eye level.
- Verify the patient is ready before you press start.
- Use the Practice Modes above to familiarize patient with the test.
646
Acuity Level - Revlative logMAR
Left
Right
651
653
652
654
650
baselinePTT: 70ms
logmar: 0.55 0.35
Optotype Size (Relative logMAR): 0.3
Optotype Size (logMAR)
0.5
648
642
Oct 14, 1:21 PM

FIG. 19

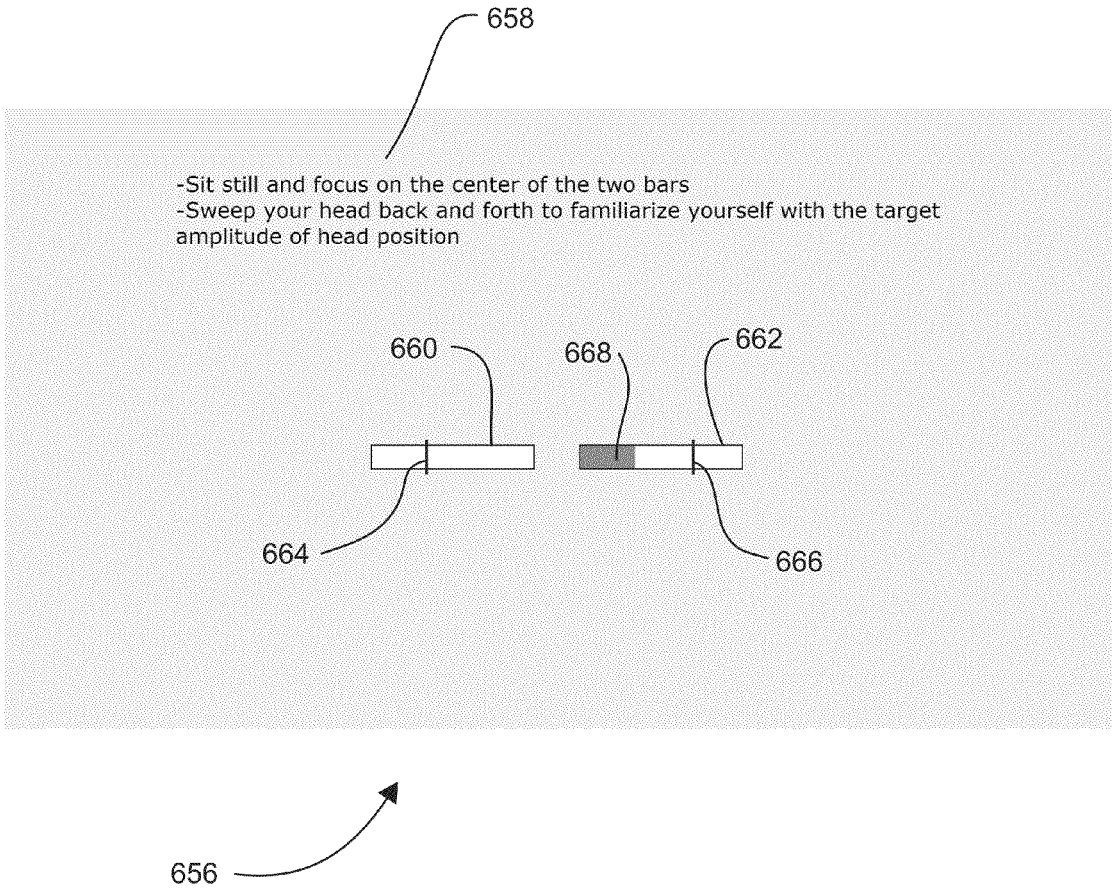
658
-Sit still and focus on the center of the two bars
-Sweep your head back and forth to familiarize yourself with the target amplitude of head position
660
668
662
664
666
656

FIG. 20

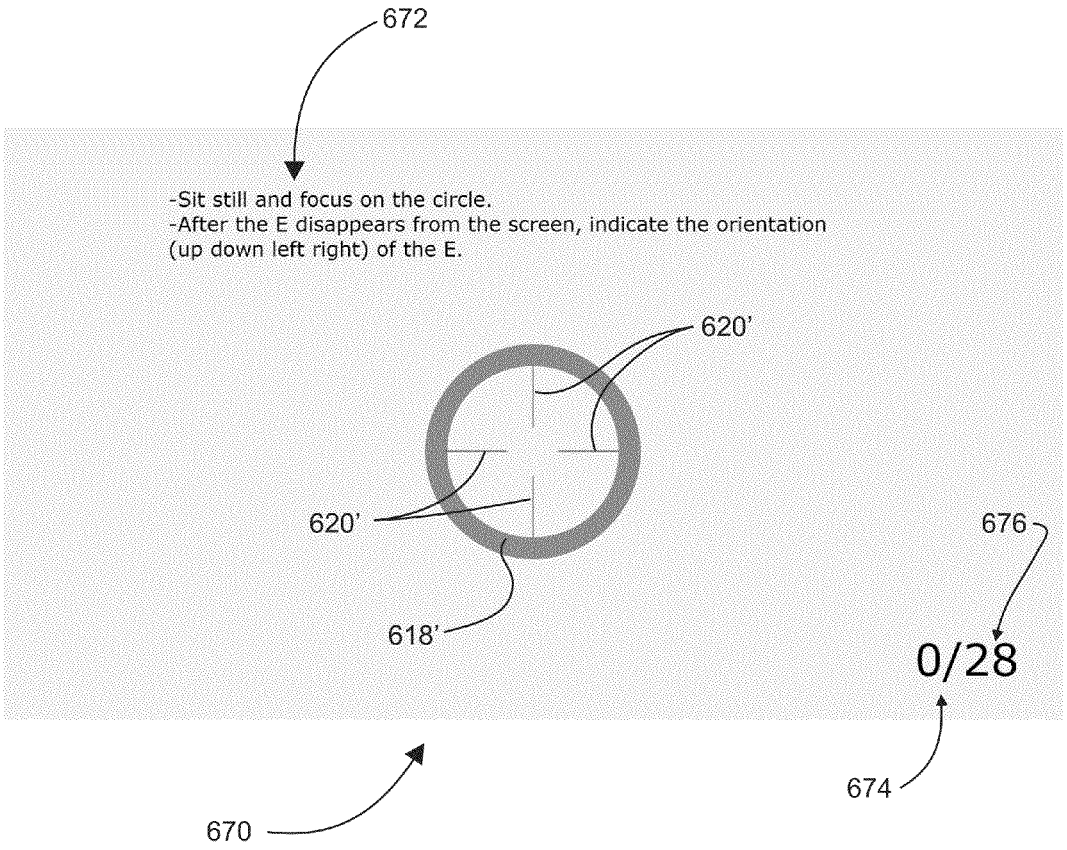
672
-Sit still and focus on the circle.
-After the E disappears from the screen, indicate the orientation (up down left right) of the E.
620'
620'
618'
676
0/28
674
670

FIG. 21

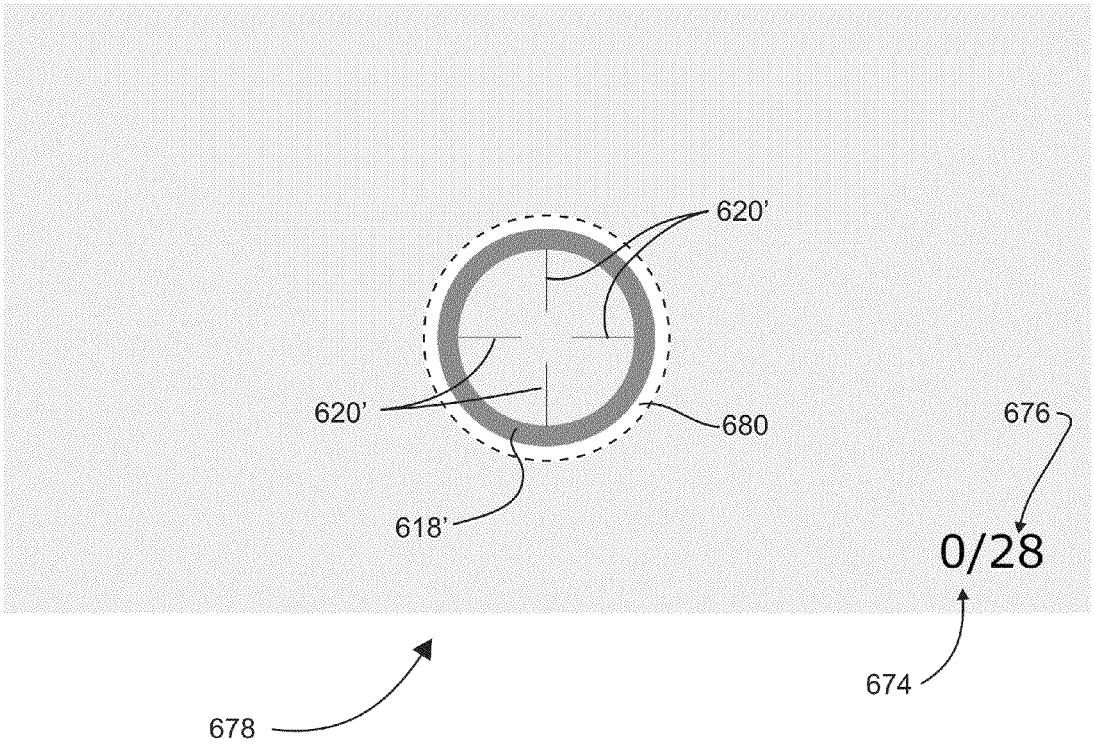

FIG. 22

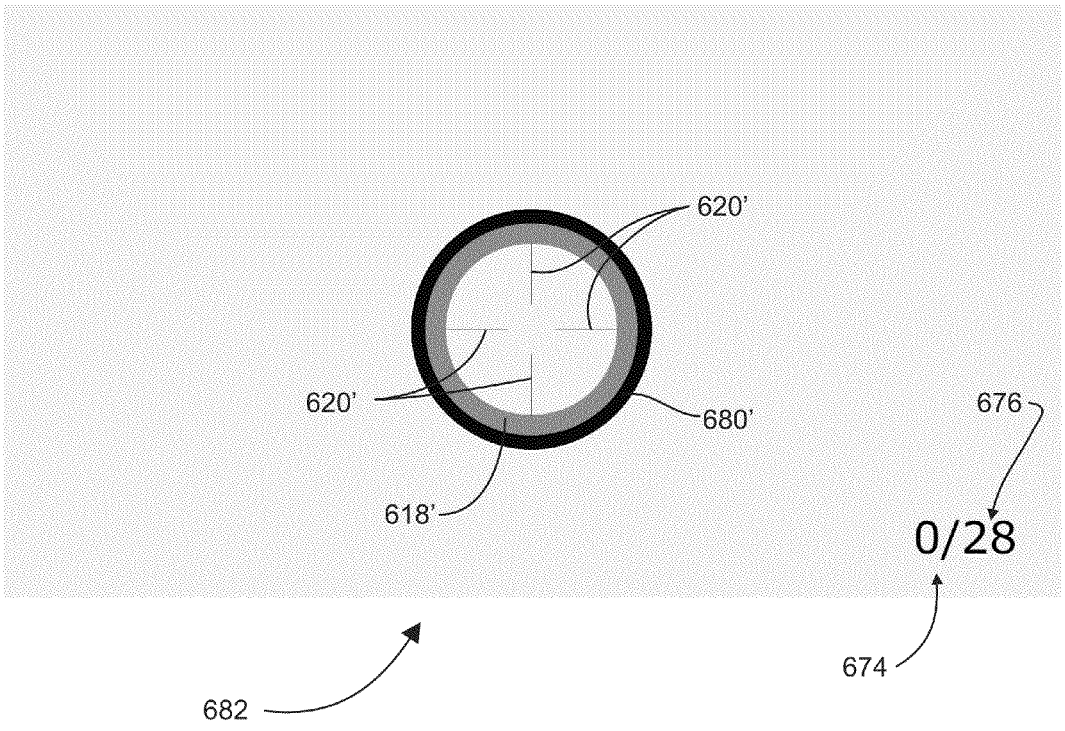

FIG. 23

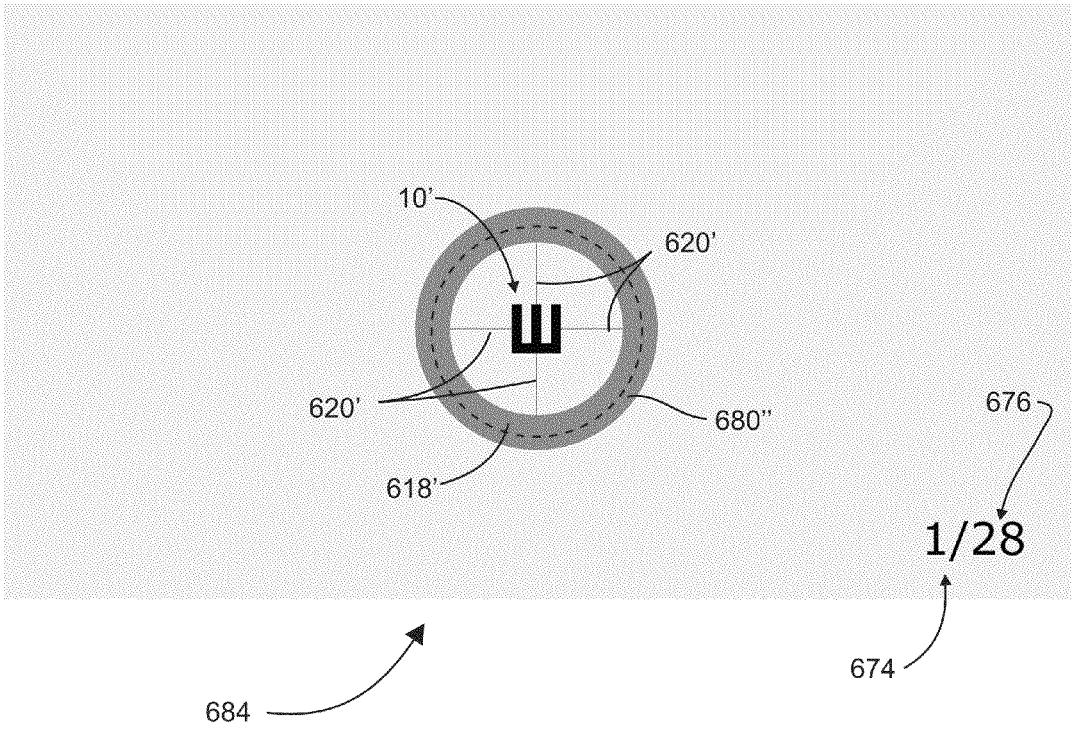

FIG. 24

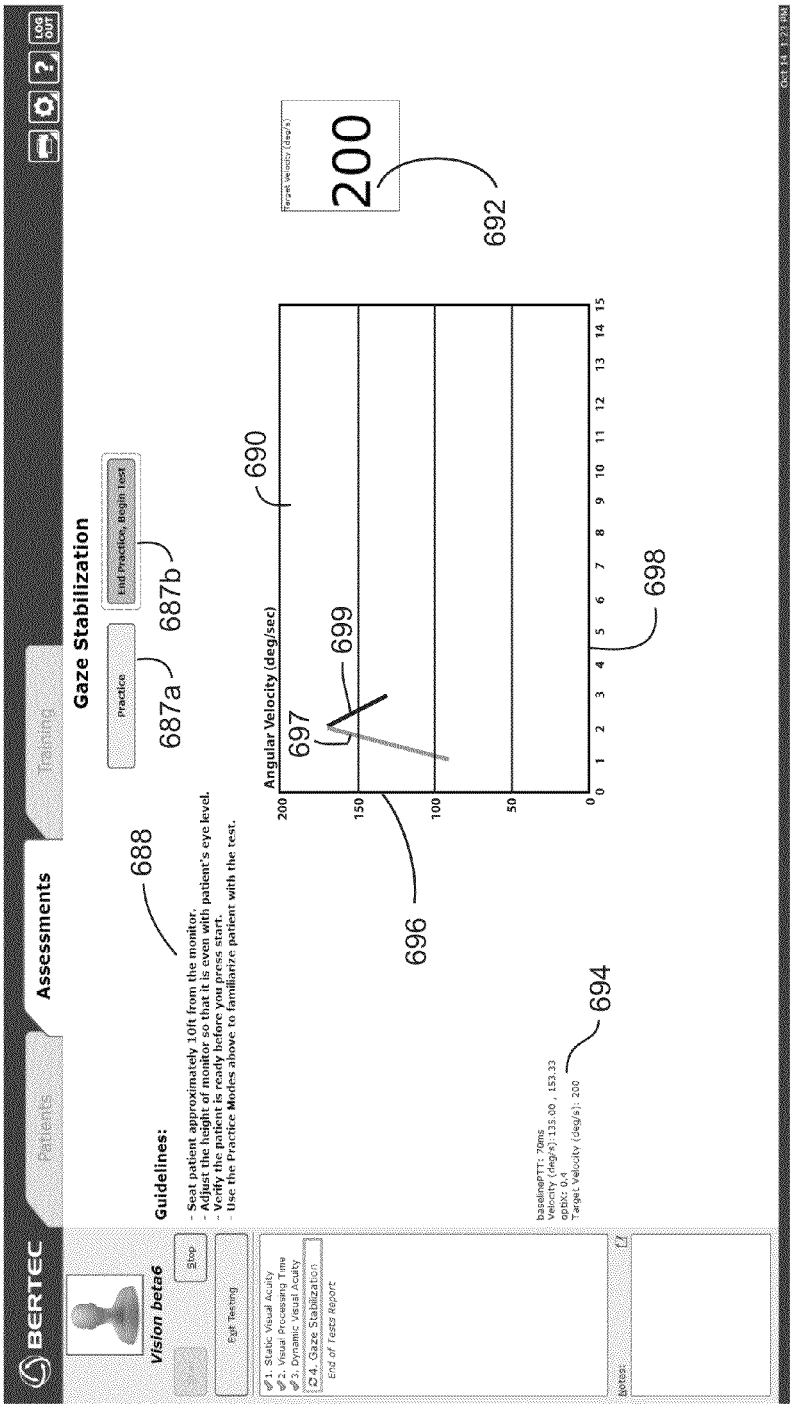
BERTEC
Patients
Assessments
Training
LOG OUT
Vision beta6
Stop
Exit Testing
1. Static Visual Acuity
2. Visual Processing Time
3. Dynamic Visual Acuity
4. Gaze Stabilization
End of Tests Report
Notes:
Guidelines:
- Seat patient approximately 10ft from the monitor.
- Adjust the height of monitor so that it is even with patient's eye level.
- Verify the patient is ready before you press start.
- Use the Practice Modes above to familiarize patient with the test.
Gaze Stabilization
Practice
End Practice, Begin Test
Angular Velocity (deg/sec)
200
Target Velocity (deg/s)
200
688
687a
687b
690
692
694
696
697
698
699
686

FIG. 25

Patient Information		
Name: Alex Barnes		**Height:** 6'5", **Weight:** N/A, **BMI:** N/A
Identifier:	**Sex:** F	**Date of Birth:** 1994/04/05

Static Visual Acuity Test Report - Sep 11, 2014

Test Parameters

Test Direction: yaw	Optotype Size: -0.3 - 1.0 logMAR
Distance: 10 ft	Optotype Display Time: n/a
Progressive Lenses: No	Target Head Velocity: n/a

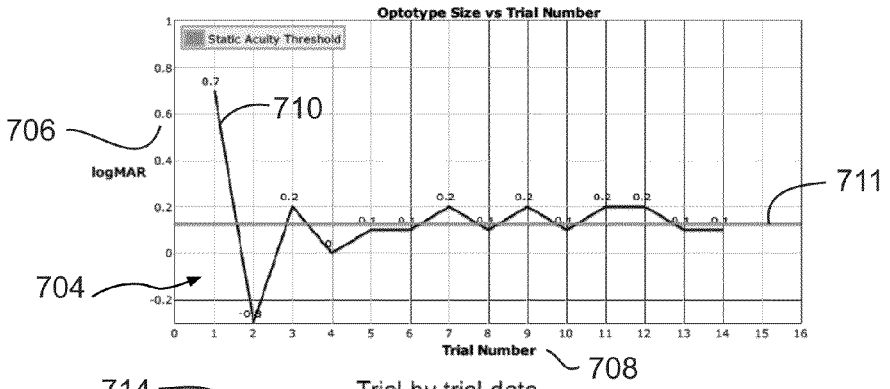

Trial by trial data

Trial Number	Optotype Size (logMAR)	Patient Response
1	0.7	correct
2	-0.3	incorrect
3	0.2	correct
4	0.0	incorrect
5	0.1	correct
6	0.1	incorrect
7	0.2	correct
8	0.1	incorrect
9	0.2	correct
10	0.1	incorrect
11	0.2	correct
12	0.2	correct
13	0.1	correct
14	0.1	incorrect

Static Acuity = 0.15 logMAR

Bertec Balance Advantage® Copyright© 2012-2014 Bertec Corporation All Rights Reserved

700 712 714 716 718

FIG. 26

Patient Information		
Name: Alex Barnes		**Height:** 6'5", **Weight:** N/A, **BMI:** N/A
Identifier:	**Sex:** F	**Date of Birth:** 1994/04/05

Visual Processing Time Report - Sep 11, 2014

Test Parameters

Test Direction: yaw
Distance: 10 ft
Progressive Lenses: No
Optotype Size: 0.125 logMAR
Optotype Display Time: 20ms - 180ms
Target Head Velocity: n/a

722

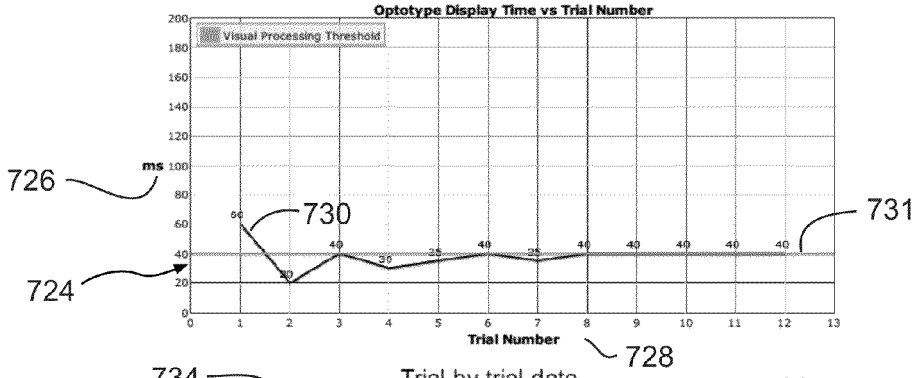

734 Trial by trial data 738

Trial Number	Display Time (ms) 736	Patient Response
1	60.0	correct
2	20.0	incorrect
3	40.0	correct
4	30.0	incorrect
5	35.0	incorrect
6	40.0	correct
7	35.0	incorrect
8	40.0	incorrect
9	40.0	correct
10	40.0	correct
11	40.0	correct
12	40.0	correct

732

Visual Processing Threshold = 40 ms

720

Bertec Balance Advantage® Copyright© 2012-2014 Bertec Corporation All Rights Reserved

FIG. 27

Patient Information		
Name: Alex Barnes		**Height:** 6'5", **Weight:** N/A, **BMI:** N/A
Identifier:	**Sex:** F	**Date of Birth:** 1994/04/05

Dynamic Visual Acuity Test Report - Sep 11, 2014

Test Parameters

Test Direction: yaw
Distance: 10 ft
Progressive Lenses: No
Optotype Size: -0.3 - 1.0 logMAR
Optotype Display Time: 40 ms
Target Head Velocity: ~100 deg/sec

742

Test Results

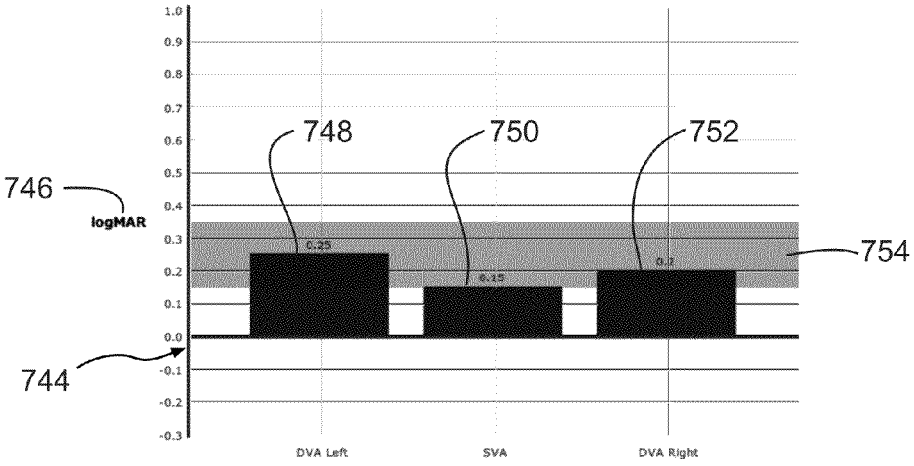

	DVA Left	SVA	DVA Right
logMAR	0.25	0.15	0.20
Average Achieved Head Velocity (deg/sec)	98.4	--	86.4
Lines Lost	1	--	0.5

758
760
762
756

740a

Bertec Balance Advantage® Copyright© 2012-2014 Bertec Corporation All Rights Reserved

FIG. 28A

Patient Information		
Name: Alex Barnes		**Height:** 6'5", **Weight:** N/A, **BMI:** N/A
Identifier:	**Sex:** F	**Date of Birth:** 1994/04/05

Dynamic Visual Acuity Test Report - Sep 11, 2014

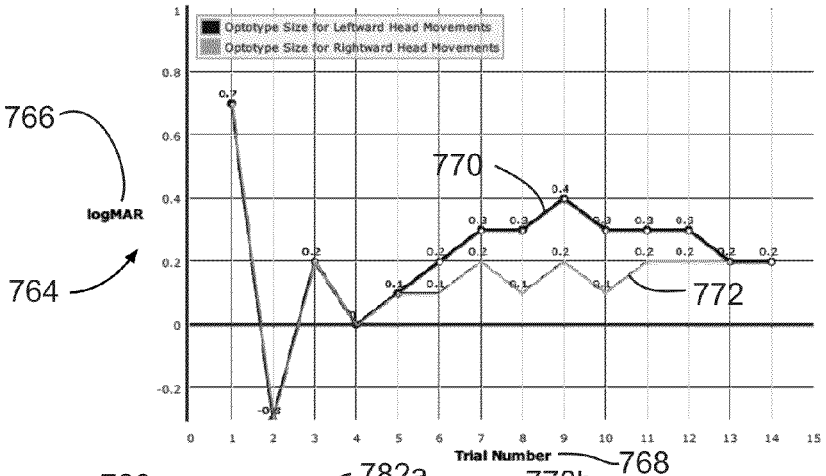

780a DVA Left 782a 778b DVA Right 780b 782b
778a 784a 776b
776a 784b

Trial Number	Optotype Size	Achieved Vel	Percent	Response	Trial Number	Optotype Size	Achieved Vel	Percent	Response
1	0.7	94.2	n/a	correct	1	0.7	102.7	n/a	correct
2	-0.3	93.0	n/a	incorrect	2	-0.3	89.1	n/a	incorrect
3	0.2	103.9	n/a	correct	3	0.2	108.2	n/a	correct
4	0.0	93.6	n/a	incorrect	4	0.0	96.3	n/a	incorrect
5	0.1	91.0	n/a	incorrect	5	0.1	92.4	n/a	correct
6	0.2	107.2	n/a	incorrect	6	0.1	1.0	n/a	incorrect
7	0.3	110.7	n/a	correct	7	0.2	91.3	n/a	correct
8	0.3	100.5	n/a	incorrect	8	0.1	101.2	n/a	incorrect
9	0.4	99.3	n/a	correct	9	0.2	93.0	n/a	correct
10	0.3	109.6	n/a	correct	10	0.1	86.6	n/a	incorrect
11	0.3	95.9	n/a	correct	11	0.2	89.9	n/a	incorrect
12	0.3	97.1	n/a	correct	12	0.2	85.1	n/a	correct
13	0.2	89.3	n/a	correct	13	0.2	87.0	n/a	incorrect
14	0.2	92.9	n/a	correct	--	--	--	--	--

774

Dynamic Acuity Left = 0.25 logMAR

Dynamic Acuity Right = 0.20 logMAR

740b

Bertec Balance Advantage® Copyright© 2012-2014 Bertec Corporation All Rights Reserved

FIG. 28B

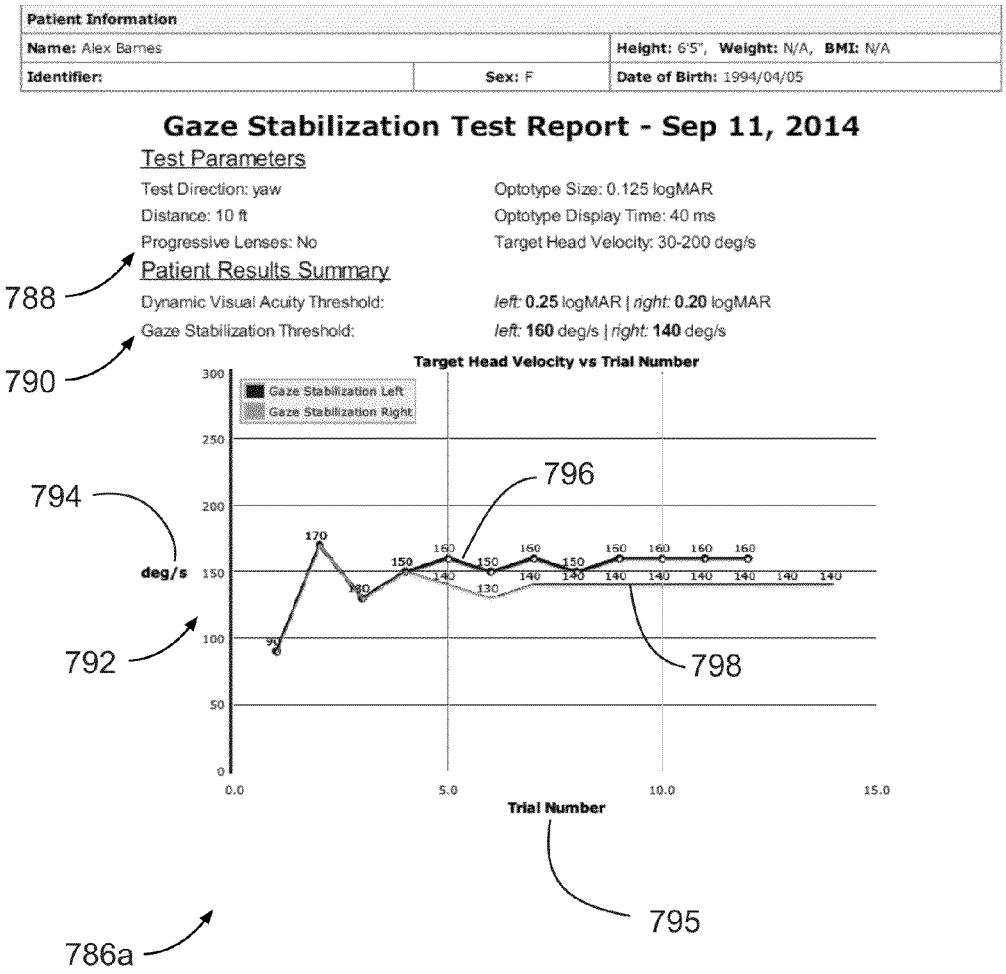

Bertec Balance Advantage® Copyright© 2012-2014 Bertec Corporation All Rights Reserved

FIG. 29A

Patient Information		
Name: Alex Barnes		**Height:** 6'5", **Weight:** N/A, **BMI:** N/A
Identifier:	**Sex:** F	**Date of Birth:** 1994/04/05

Gaze Stabilization Test Report - Sep 11, 2014

804a 806a GST Left 810a 802b 804b GST Right 806b
802a 808a 808b 810b

Trial Number	Target Velocity	Achieved Vel	Percent	Response	Trial Number	Target Velocity	Achieved Vel	Percent	Response
1	90.0	93.7	--	correct	1	90.0	84.4	--	correct
2	170.0	163.1	--	incorrect	2	170.0	176.2	--	incorrect
3	130.0	129.1	--	correct	3	130.0	129.2	--	correct
4	150.0	155.4	--	correct	4	150.0	147.2	--	incorrect
5	160.0	168.6	--	incorrect	5	140.0	136.6	--	incorrect
6	150.0	153.1	--	correct	6	130.0	120.9	--	correct
7	160.0	159.1	--	incorrect	7	140.0	132.8	--	correct
8	150.0	143.3	--	correct	8	140.0	139.6	--	correct
9	160.0	158.3	--	correct	9	140.0	132.7	--	correct
10	160.0	155.8	--	incorrect	10	140.0	131.9	--	correct
11	160.0	164.1	--	correct	11	140.0	141.6	--	correct
12	160.0	161.6	--	incorrect	12	140.0	145.0	--	correct
--	--	--	--	--	13	140.0	149.6	--	correct
--	--	--	--	--	14	140.0	130.4	--	correct

800

Gaze Stabilization Left = 160 deg/s

Gaze Stabilization Right = 140 deg/s

786b

Bertec Balance Advantage® Copyright© 2012-2014 Bertec Corporation All Rights Reserved

FIG. 29B

SYSTEM AND METHOD FOR TESTING DYNAMIC VISUAL ACUITY AND/OR GAZE STABILIZATION

CROSS-REFERENCE TO RELATED APPLICATIONS

Not Applicable

STATEMENT REGARDING FEDERALLY SPONSORED RESEARCH OR DEVELOPMENT

Not Applicable.

NAMES OF THE PARTIES TO A JOINT RESEARCH AGREEMENT

Not Applicable.

INCORPORATION BY REFERENCE OF MATERIAL SUBMITTED ON A COMPACT DISK

Not Applicable.

BACKGROUND OF THE INVENTION

1. Field of the Invention

The invention generally relates to a system and method for the testing the vision of a subject. More particularly, the invention relates to a system and method for testing the dynamic visual acuity and gaze stabilization of a subject.

2. Background

People maintain their upright posture and balance using inputs from proprioceptive, vestibular and visual systems. During normal daily activity, where dynamic balance is to be maintained, other factors also matter. These factors are visual acuity, reaction time, and muscle strength. Reaction time and muscle strength are important to be able to recover from a potential fall. Visual acuity is important to see a potential danger.

In general, a test for measuring visual acuity (VA) is concerned with measuring the acuteness or clearness of a subject's vision. A test that is specifically designed to measure a subject's dynamic visual acuity focuses on the subject's ability to visually discern fine details in an object while of the head of the subject is being displaced at a generally constant velocity, while a gaze stabilization test focuses on the ability of a subject to ascertain details of an object while his or her head is being displaced over a range of different velocities.

Conventional tests for measuring dynamic visual acuity and gaze stabilization require the distance from the subject to the display screen to be accurately determined. As such, either this distance must be measured each time the test is performed, or alternatively, the distance must be initially measured and then, the placement of the subject relative to display screen must always remain consistent in the testing room in order for the test results to be accurate (e.g., the chair on which the subject is seated during the test and the display screen on which the object is displayed must always be maintained a constant distance apart). Obviously, measuring the distance between the subject and the display screen each time the test is performed is both inconvenient and time consuming for the both the subject and the person performing the test. Also, determining the distance before the performance of each test is particularly problematic when subjects having disorders are being tested. These subjects are especially susceptible to easy fatigue. In addition, it is often very difficult, or even completely impractical, to always maintain a constant distance between each subject being tested and the display screen. After all, the visual testing system may comprise a portable type system that is moved from site to site, and set up in different locations each time the test is being performed. In such a portable situation, it is virtually impossible to maintain a constant distance between the location of the subject and the display screen. Thus, it is necessary to measure this distance each time the testing arrangement is set up. Even if the testing arrangement is not portable, and always in the same testing room, it is still very difficult to maintain a constant distance between the subject and the display screen. For example, if subjects are seated on a chair during the vision test and the chair is not fixed in place, subjects will most likely displace the chair when they get up from the seated position after completing the test, thereby shifting the position of the chair relative to the display screen. This movement of the chair will require the distance between the subject and display screen to be determined again.

What is needed, therefore, is a system and method for testing the dynamic visual acuity and gaze stabilization of a subject that does not require the measurement of the exact distance between the subject and the display screen. Moreover, a system and method for testing the dynamic visual acuity and gaze stabilization of a subject is needed that can be easily transported, and set up in different locations, without necessitating the measurement of the exact distance between the subject and the display screen at each of the different testing locations. Furthermore, a need exists for a system and method for testing the dynamic visual acuity and gaze stabilization of a subject that is capable of being quickly implemented, and produces accurate results as long as the relative location of the subject to the display screen remains generally constant during a particular test session.

BRIEF SUMMARY OF EMBODIMENTS OF THE INVENTION

Accordingly, the present invention is directed to a system and method for testing the dynamic visual acuity and gaze stabilization of a subject that substantially obviates one or more problems resulting from the limitations and deficiencies of the related art.

In accordance with one or more embodiments of the present invention, there is provided a system for testing the vision of a subject, which includes: a motion sensing device, the motion sensing device configured to measure a velocity or speed of a head of a subject; a visual display device having an output screen, the visual display device configured to display one or more visual objects on the output screen so that the one or more visual objects are visible to the subject; and a data processing device, the data processing device operatively coupled to the motion sensing device and the visual display device. The data processing device being specially programmed to display one or more configurations of one or more visual objects having a first initial size on the output screen of the visual display device while the subject maintains a generally fixed position of his or her head; determine whether or not the subject correctly identifies the one or more configurations of the one or more visual objects having the first initial size; incrementally decrease and/or increase the size of the one or more visual objects on the output screen of the visual display device during a first set of successive trials, and determine whether or not the subject correctly identifies one or more configurations of each of the differently sized visual objects during the first set of successive trials while the subject maintains a generally fixed position of his or her head;

determine a size parameter of a first threshold version of the one or more visual objects based upon a performance of the subject during the first set of successive trials during which the subject maintains the generally fixed position of his or her head, wherein the determination of the size parameter of the first threshold version of the one or more visual objects does not require the exact distance between the subject and the visual display device to be measured or determined; display one or more configurations of the one or more visual objects having a second initial size on the output screen of the visual display device while the subject's head undergoes displacement at a velocity or speed within a predetermined range as measured by the motion sensing device; determine whether or not the subject correctly identifies the one or more configurations of the one or more visual objects having the second initial size; incrementally decrease and/or increase the size of the one or more visual objects on the output screen of the visual display device during a second set of successive trials, and determine whether or not the subject correctly identifies one or more configurations of each of the differently sized visual objects during the second set of successive trials when the subject's head undergoes displacement at a velocity or speed within the predetermined range as measured by the motion sensing device; determine a size parameter of a second threshold version of the one or more visual objects based upon a performance of the subject during the second set of successive trials during which the subject's head undergoes displacement; compare the size parameter of the second threshold version of the one or more visual objects to the size parameter of the first threshold version of the one or more visual objects; and generate a quantitative assessment of dynamic visual acuity loss using the size parameters of the first and second threshold versions of the one or more visual objects.

In a further embodiment of this aspect of the present invention, the motion sensing device comprises at least one of an accelerometer, a gyroscope, and a magnetometer.

In yet a further embodiment, the motion sensing device is configured to be attached to the head of the subject by means of an adjustable band.

In still a further embodiment, the system further comprises a user input device, the user input device configured to output an input signal in response to a manipulation of the user input device by a system user, the user input device being operatively coupled to the data processing device. The determination of whether or not the subject correctly identifies the one or more configurations of the one or more visual objects during the first and second successive trials is based upon the input signal from the user input device.

In yet a further embodiment, the user input device comprises at least one of: (i) a mouse, (ii) a keyboard, (iii) a clicking device, (iv) a voice recognition device, and (v) a joystick.

In still a further embodiment, the one or more visual objects displayed on the output screen of the visual display device comprise one or more optotypes, the one or more optotypes comprising at least one of: (i) a Tumbling E, (ii) a Landolt C, (iii) different letters of a recognized alphabet, and (iv) any other identifiable symbol.

In yet a further embodiment, the second initial size of the one or more visual objects is equal to the first initial size of the one or more visual objects or the second initial size of the one or more visual objects is larger than the first initial size of the one or more visual objects.

In still a further embodiment, during the second set of successive trials, the data processing device is further specially programmed to generate and display a visual indicator on the output screen of the visual display device that indicates whether or not the velocity or speed at which the subject's head is being displaced lies within the predetermined range.

In yet a further embodiment, the data processing device is further specially programmed to generate a practice mode for the second set of successive trials during which the subject's head undergoes displacement; and wherein, during the practice mode, the data processing device is specially programmed to generate and display a visual indicator on the output screen of the visual display device that indicates whether or not the head of the subject is being displaced within a prescribed range of motion.

In still a further embodiment, the system further comprises an auditory output device operatively coupled to the data processing device; and wherein, during the second set of successive trials, the data processing device is further specially programmed to generate and output an audible cue configured to assist the subject in achieving a head velocity or speed that lies within the predetermined range.

In yet a further embodiment, the one or more configurations of the one or more visual objects displayed on the output screen of the visual display device by the data processing device comprise a series of different visual objects displayed in succession on the output screen of the visual display device.

In accordance with one or more other embodiments of the present invention, there is provided a system for testing the vision of a subject, which includes: a motion sensing device, the motion sensing device configured to measure a velocity or speed of a head of a subject; a visual display device having an output screen, the visual display device configured to display one or more visual objects on the output screen so that the one or more visual objects are visible to the subject; and a data processing device, the data processing device operatively coupled to the motion sensing device and the visual display device. The data processing device being specially programmed to display one or more configurations of one or more visual objects having a first initial size on the output screen of the visual display device while the subject maintains a generally fixed position of his or her head; determine whether or not the subject correctly identifies the one or more configurations of the one or more visual objects having the first initial size; incrementally decrease and/or increase the size of the one or more visual objects on the output screen of the visual display device during a first set of successive trials, and determine whether or not the subject correctly identifies one or more configurations of each of the differently sized visual objects during the first set of successive trials while the subject maintains a generally fixed position of his or her head; determine a size parameter of a first threshold version of the one or more visual objects based upon a performance of the subject during the first set of successive trials during which the subject maintains the generally fixed position of his or her head, wherein the determination of the size parameter of the first threshold version of the one or more visual objects does not require the exact distance between the subject and the visual display device to be measured or determined; display one or more configurations of the one or more visual objects having a second initial size on the output screen of the visual display device while the subject's head undergoes displacement at a velocity or speed within a predetermined range as measured by the motion sensing device; determine whether or not the subject correctly identifies the one or more configurations of the one or more visual objects having the second initial size; incrementally decrease and/or increase the predetermined velocity or speed range within which the subject's head is to be displaced while the subject identifies one or more

configurations of the one or more visual objects during a second set of successive trials, and determine whether or not the subject correctly identifies the one or more configurations of the one or more visual objects for each of the predetermined velocity or speed ranges during the second set of successive trials, the velocity or speed of the head of the subject being measured by the motion sensing device; compute a maximum head velocity or head speed at which the subject is capable of correctly identifying one or more configurations of the one or more visual objects; and generate a quantitative assessment of gaze stabilization based upon the computed maximum head velocity or head speed at which the subject is capable of correctly identifying one or more configurations of the one or more visual objects.

In a further embodiment of this aspect of the present invention, the one or more visual objects displayed on the output screen of the visual display device comprise one or more optotypes, the one or more optotypes comprising at least one of: (i) a Tumbling E, (ii) a Landolt C, (iii) different letters of a recognized alphabet, and (iv) any other identifiable symbol.

In yet a further embodiment, the second initial size of the one or more visual objects is equal to the first initial size of the one or more visual objects or the second initial size of the one or more visual objects is larger than the first initial size of the one or more visual objects.

In still a further embodiment, during the second set of successive trials, the data processing device is further specially programmed to generate and display a visual indicator on the output screen of the visual display device that indicates whether or not the velocity or speed at which the subject's head is being displaced lies within the predetermined range.

In yet a further embodiment, the system further comprises an auditory output device operatively coupled to the data processing device; and wherein, during the second set of successive trials, the data processing device is further specially programmed to generate and output an audible cue configured to assist the subject in achieving a head velocity or speed that lies within the predetermined range.

In still a further embodiment, the one or more configurations of the one or more visual objects displayed on the output screen of the visual display device by the data processing device comprise a series of different visual objects displayed in succession on the output screen of the visual display device.

In accordance with yet one or more other embodiments of the present invention, there is provided a method for testing the vision of a subject, the method comprising the steps of: (i) providing a motion sensing device, the motion sensing device configured to measure a velocity or speed of the head of the subject; (ii) providing a visual display device having an output screen, the visual display device configured to display one or more visual objects on the output screen so that the one or more visual objects are visible to the subject; (iii) providing a data processing device, the data processing device operatively coupled to the motion sensing device and the visual display device; (iv) positioning the subject in front of the output screen of the visual display device such that one or more visual objects are visible to the subject; (v) displaying one or more configurations of the one or more visual objects having a first initial size on the output screen of the visual display device while the subject maintains a generally fixed position of his or her head; (vi) determining, by using the data processing device, whether or not the subject correctly identifies the one or more configurations of the one or more visual objects having the first initial size; (vii) incrementally decreasing and/or increasing the size of the one or more visual objects on the output screen of the visual display device using the data processing device during a first set of successive trials, and determining whether or not the subject correctly identifies one or more configurations of each of the differently sized visual objects during the first set of successive trials; (viii) determining, by using the data processing device, a size parameter of a first threshold version of the one or more visual objects based upon a performance of the subject during the first set of successive trials during which the subject maintains the generally fixed position of his or her head, wherein the determination of the size parameter of the first threshold version of the one or more visual objects does not require the exact distance between the subject and the visual display device to be measured or determined; (ix) displaying one or more configurations of the one or more visual objects having a second initial size on the output screen of the visual display device when the subject's head undergoes displacement at a velocity or speed within a predetermined range as measured by the motion sensing device; (x) determining, by using the data processing device, whether or not the subject correctly identifies the one or more configurations of the one or more visual objects having the second initial size; (xi) incrementally decreasing and/or increasing the size of the one or more visual objects on the output screen of the visual display device using the data processing device during a second set of successive trials, and determining whether or not the subject correctly identifies one or more configurations of each of the differently sized visual objects during the second set of successive trials when the subject's head undergoes displacement at a velocity or speed within the predetermined range as measured by the motion sensing device; (xii) determining, by using the data processing device, a size parameter of a second threshold version of the one or more visual objects based upon a performance of the subject during the second set of successive trials during which the subject's head undergoes displacement; (xiii) comparing, by using the data processing device, the size parameter of the second threshold version of the one or more visual objects to the size parameter of the first threshold version of the one or more visual objects; (xiv) generating, by using the data processing device, a quantitative assessment of dynamic visual acuity loss using the size parameters of the first and second threshold versions of the one or more visual objects; (xv) outputting the quantitative assessment of dynamic visual acuity loss of the subject on the output screen of the visual display device; (xvi) displaying one or more configurations of the one or more visual objects having a third initial size on the output screen of the visual display device when the subject's head undergoes displacement at a velocity or speed within a predetermined range as measured by the motion sensing device, (xvii) determining, by using the data processing device, whether or not the subject correctly identifies the one or more configurations of the one or more visual objects having the third initial size; (xviii) incrementally decreasing and/or increasing, using the data processing device, the predetermined velocity or speed range within which the subject's head is to be displaced while identifying one or more configurations of the one or more visual objects during a third set of successive trials, and determining whether or not the subject correctly identifies the one or more configurations of the one or more visual objects for each of the predetermined velocity or speed ranges during the third set of successive trials, the velocity or speed of the head of the subject being measured by the motion sensing device; (xix) computing, by using the data processing device, a maximum head velocity or head speed at which the subject is capable of correctly identifying one or more configurations of the one or more visual objects; (xx) generating, by using the data processing device, a quantitative assessment of gaze

stabilization based upon the computed maximum head velocity or head speed at which the subject is capable of correctly identifying the one or more configurations of the one or more visual objects; and (xxi) outputting the quantitative assessment of gaze stabilization of the subject on the output screen of the visual display device.

In a further embodiment of this aspect of the present invention, the one or more configurations of the one or more visual objects are only displayed on the output screen of the visual display device during the second set or third set of successive trials when the data processing device determines that the subject's head is undergoing displacement at a velocity or speed that lies within the predetermined range.

In yet a further embodiment, a user input device is additionally provided, the user input device configured to output an input signal in response to a manipulation of the user input device by a system user, the user input device being operatively coupled to the data processing device. In this further embodiment, the method further includes the step of inputting a response of the subject regarding the configuration of the one or more visual objects into the user input device, outputting an input signal from the user input device that is indicative of the response of the subject, and transmitting the input signal of the user input device to the data processing device so that the data processing device is capable of determining whether or not the subject has correctly identified a configuration of the one or more visual objects based upon the response of the subject.

In still a further embodiment, the user input device is configured to accept at least four different responses of a subject, each of the at least four different responses of the subject corresponding to a different configuration of the one or more visual objects.

In yet a further embodiment, the method further comprises the step of computing, by using the data processing device, the logarithm of the ratio of the size parameter of the second threshold version of the one or more visual objects to the size parameter of the first threshold version of the one or more visual objects.

In still a further embodiment, the computed logarithm comprises a base 10 logarithm.

In yet a further embodiment, a static visual acuity of the subject is not determined in carrying out the steps of the method.

In still a further embodiment, an exact distance between the subject and the visual display device is not measured or determined in carrying out the steps of the method.

In yet a further embodiment, a Snellen fraction is not determined in carrying out the steps of the method.

It is to be understood that the foregoing summary and the following detailed description of the present invention are merely exemplary and explanatory in nature. As such, the foregoing summary and the following detailed description of the invention should not be construed to limit the scope of the appended claims in any sense.

BRIEF DESCRIPTION OF THE SEVERAL VIEWS OF THE DRAWINGS

The invention will now be described, by way of example, with reference to the accompanying drawings, in which:

FIG. **1** is a diagrammatic perspective view of a first exemplary vision testing system that utilizes a laptop computing device, according to one embodiment of the invention;

FIG. **2** is a diagrammatic perspective view of a second exemplary vision testing system that utilizes a computing device disposed on a movable cart, according to another embodiment of the invention;

FIG. **3** is a diagrammatic perspective view of a third exemplary vision testing system that utilizes a computing device and first visual display device disposed on a first movable cart and a second visual display disposed on a second movable cart, according to yet another embodiment of the invention;

FIG. **4** is a block diagram of constituent components that may be utilized in the embodiments of the vision testing system described herein;

FIG. **5** is an illustration of a first exemplary type of optotype that may be utilized in the embodiments of the vision testing system described herein;

FIG. **6** is an illustration of a second exemplary type of optotype that may be utilized in the embodiments of the vision testing system described herein;

FIG. **7** is a screen image of the visual display device with first exemplary types of visual indicators that may be utilized in the embodiments of the vision testing system described herein;

FIG. **8**A is a screen image of the visual display device with second exemplary types of visual indicators that may be utilized in the embodiments of the vision testing system described herein, wherein the displacement of the subject's head to the left is shown;

FIG. **8**B is another screen image of the visual display device with the second exemplary types of visual indicators illustrated thereon, wherein the displacement of the subject's head to the right is shown;

FIG. **9** is a screen image of the visual display device with a third exemplary type of visual indicator that may be utilized in the embodiments of the vision testing system described herein;

FIG. **10** is a diagrammatic view of the directions of subject head rotation that are capable of being measured with the motion sensing device of the vision testing system described herein;

FIG. **11**A is a partial flowchart illustrating a procedure for testing the dynamic visual acuity of a subject carried out by the systems illustrated in FIGS. **1-3**, according to an embodiment of the invention;

FIG. **11**B is a continuation of the flowchart of FIG. **11**A, which illustrates additional steps of the procedure for testing the dynamic visual acuity of a subject, according to an embodiment of the invention;

FIG. **12** is a continuation of the flowchart of FIG. **11**B, which illustrates yet additional steps of the procedure for testing the dynamic visual acuity of a subject, according to an embodiment of the invention;

FIG. **13**A is a partial flowchart illustrating a procedure for testing the gaze stabilization of a subject carried out by the systems illustrated in FIGS. **1-3**, according to an embodiment of the invention;

FIG. **13**B is a continuation of the flowchart of FIG. **13**A, which illustrates additional steps of the procedure for testing the gaze stabilization of a subject, according to an embodiment of the invention;

FIG. **14** is a continuation of the flowchart of FIG. **13**B, which illustrates yet additional steps of the procedure for testing the gaze stabilization of a subject, according to an embodiment of the invention;

FIG. **15** is a first exemplary operator screen image of the visual display device, which may be displayed during the performance of a static visual acuity test, according to an embodiment of the invention;

FIG. **16** is a subject screen image of the visual display device with a fourth exemplary type of visual indicator that may be utilized during the performance of the static visual acuity test, according to an embodiment of the invention;

FIG. **17** is a subject test screen image of the visual display device prior to the performance a static visual acuity test or a visual processing time test, wherein the fourth exemplary type of visual indicator is displayed together with the second exemplary type of optotype, according to an embodiment of the invention;

FIG. **18** is a second exemplary operator screen image of the visual display device, which may be displayed during the performance of a visual processing time test, according to an embodiment of the invention;

FIG. **19** is a third exemplary operator screen image of the visual display device, which may be displayed during the performance of a dynamic visual acuity test, according to an embodiment of the invention;

FIG. **20** is a subject practice screen image of the visual display device prior to the performance of a dynamic visual acuity test, which allows a subject to practice his or her amplitude of head displacement, according to an embodiment of the invention;

FIG. **21** is an initial subject screen image of the visual display device at the start of a dynamic visual acuity test or a gaze stabilization test, according to an embodiment of the invention;

FIG. **22** is a subject test screen image of the visual display device at the start of a dynamic visual acuity test or a gaze stabilization test, wherein the subject is moving his or her head at an angular velocity that exceeds the desired range, according to an embodiment of the invention;

FIG. **23** is a subject test screen image of the visual display device at the start of a dynamic visual acuity test or a gaze stabilization test, wherein the subject is moving his or her head at an angular velocity that is less than the desired range, according to an embodiment of the invention;

FIG. **24** is a subject test screen image of the visual display device during a dynamic visual acuity test or a gaze stabilization test, wherein the subject is moving his or her head at an angular velocity within the desired range, according to an embodiment of the invention;

FIG. **25** is a fourth exemplary operator screen image of the visual display device, which may be displayed during the performance of a gaze stabilization test, according to an embodiment of the invention;

FIG. **26** is a fifth exemplary operator screen image of the visual display device, which illustrates an exemplary report generated by the vision testing system for displaying the results from a static visual acuity test, according to an embodiment of the invention;

FIG. **27** is a sixth exemplary operator screen image of the visual display device, which illustrates an exemplary report generated by the vision testing system for displaying the results from a visual processing time test, according to an embodiment of the invention;

FIG. **28**A is a seventh exemplary operator screen image of the visual display device, which illustrates a first part of an exemplary report generated by the vision testing system for displaying the results from a dynamic visual acuity test, according to an embodiment of the invention;

FIG. **28**B is a seventh exemplary operator screen image of the visual display device, which illustrates a second part of an exemplary report generated by the vision testing system for displaying the results from a dynamic visual acuity test, according to an embodiment of the invention; and

FIG. **29**A is an eighth exemplary operator screen image of the visual display device, which illustrates a first part of an exemplary report generated by the vision testing system for displaying the results from a gaze stabilization test, according to an embodiment of the invention; and

FIG. **29**B is an eighth exemplary operator screen image of the visual display device, which illustrates a second part of an exemplary report generated by the vision testing system for displaying the results from a gaze stabilization test, according to an embodiment of the invention.

Throughout the figures, the same components/steps are always denoted using the same reference characters so that, as a general rule, they will only be described once.

DETAILED DESCRIPTION OF EMBODIMENTS OF THE INVENTION

The present invention is described herein, in an exemplary manner, with reference to computer system architecture and flowcharts that illustrate exemplary processes carried out by the computer system. In one or more embodiments, functional blocks of the flowchart illustrations can be implemented by computer system instructions. These computer program instructions may be loaded directly onto an internal data storage device of a computing device (e.g., a hard drive of a computer). Alternatively, these computer program instructions could be stored on a portable computer-readable medium (e.g., a flash drive, a floppy disk, a compact disk, etc.), and then subsequently loaded onto a computing device such that the instructions can be executed thereby. In other embodiments, these computer program instructions could be embodied in the hardware of the computing device, rather than in the software thereof. It is also possible for the computer program instructions to be embodied in a combination of both the hardware and the software.

This description describes in general form the computer program(s) required to carry out the dynamic visual acuity and gaze stabilization testing of a subject. Any competent programmer in the field of information technology could develop a system using the description set forth herein.

For the sake of brevity, conventional computer system components, conventional data networking, and conventional software coding will not be described in detail herein. Also, it is to be understood that the connecting lines shown in the block diagram(s) included herein are intended to represent functional relationships and/or operational couplings between the various components. Similarly, connecting lines are also used between the elements of the flowcharts in order to illustrate the functional relationships therebetween. In addition to that which is explicitly depicted, it is to be understood that many alternative or additional functional relationships and/or physical connections may be incorporated in a practical application of the system.

1. Exemplary Vision Testing Systems

A first exemplary embodiment of a vision testing system is seen generally at **100** in FIG. **1**. In the illustrative embodiment, the vision testing system **100** generally comprises a laptop computing device **102** with a visual display device **104**. The laptop computing device **102** is one exemplary form of a data processing device and/or data processing and data acquisition device. In FIG. **1**, the laptop computing device **102** is disposed on an adjustable height table **106** so that the height of the laptop computing device **102** is selectively adjustable by a user. In one or more embodiments, the height of the table **106** is adjusted prior to each test session such that the center of the visual display device **104** of the laptop computing device **102**, which contains the one or more visual

objects **10**, is generally horizontally aligned with the eyes of the subject **18** (i.e., so the subject **18** is looking straight at the visual object **10** on the visual display device **104** during the testing).

The one or more visual objects **10** (e.g., optotypes), which the subject identifies during each vision test described herein, are displayed on the visual display device **104** of the laptop computing device **102** in the first exemplary embodiment. Specifically, as shown in FIG. **1**, the visual object **10** is displayed on the output screen of the laptop visual display device **104** within a circle **12**. The circle **12** circumscribes the visual object **10** and focuses the attention of the subject **18** on the central region of the output screen containing the visual object **10**.

While a circle **12** is used to circumscribe the visual object **10** in the exemplary embodiment of FIG. **1**, it is to be understood that other suitable shapes could be used to circumscribe the visual object **10** as well. For example, the visual object **10** may be alternatively circumscribed by a square or rectangle, as these shapes are also capable of effectively focusing the subject's attention on the central region of the output screen of the visual display device **104** containing the visual object **10**.

In addition, while the visual object **10** in FIG. **1** is in the form of a Landolt C optotype, it is to be understood that other suitable visual objects **10** may be used in place of the Landolt C. For example, the visual object **10** alternatively may comprise a Tumbling E optotype or an optotype comprising different letters of a recognized alphabet (e.g., different letters of the English alphabet). That is, in some embodiments, the subject **18** may identify different letters of a recognized alphabet, rather than different orientations of the same letter or optotype. Also, in other embodiments, the visual object **10** alternatively may comprise any other identifiable symbol (e.g., a crescent, a star, etc.).

In one or more embodiments, different letters or objects may be displayed in succession during a particular test (e.g., during the dynamic visual acuity (DVA) test or gaze stabilization test (GST) described hereinafter). For example, during a particular test, a Tumbling E optotype may be displayed first, then followed by the letter "K", a crescent symbol, a star symbol, etc. In this exemplary fashion, the letters that are displayed to the subject **18** can be consistently varied during the performance of the testing.

Referring again to FIG. **1**, it can be seen that the head **30** of the subject **18** is fitted with a motion sensing device **28** disposed thereon. In particular, in the illustrative embodiment, the motion sensing device **28** is removably coupled to the head of the subject **18** using a stretchable, elastic headband **26** (i.e., a resilient band **26**). The motion sensing device **28** is configured to measure a velocity or speed of the head **30** of the subject **18** when the head **30** of the subject **18** is displaced during the latter portion of the dynamic visual acuity (DVA) and gaze stabilization tests described herein. That is, the motion sensing device **28** determines the angular displacement and velocity of the subject's head **30** during the latter portions of the dynamic visual acuity (DVA) and gaze stabilization tests (e.g., the angular velocity of the subject's head **30** in degrees per second). In one or more embodiments, the motion sensing device **28** comprises at least one of an accelerometer and a gyroscope.

In an exemplary embodiment, the motion sensing device **28** may comprise a three-dimensional motion sensing device (i.e., an inertial measurement unit (IMU)) having a 3-axis accelerometer, a 3-axis rate gyro, and a 3-axis compass (i.e., a 3-axis magnetometer). Also, the exemplary motion sensing device **28** may comprise a wireless data connection to the laptop computing device **102**. In particular, the laptop computing device **102** may comprise a data transmission interface unit that is operatively connected to one of the output ports of the laptop computing device **102**, such as the universal serial bus (USB) port of the laptop computing device **102**. As such, the laptop computing device **102** provided with the data transmission interface unit wirelessly communicates with the motion sensing device **28** using a local wireless network. In addition, the exemplary motion sensing device **28** is both lightweight (e.g., less than 30 grams) and compact in size (e.g., less than 40 mm by 70 mm by 20 mm) so that it is generally comfortable for the subject **18** to wear on his or her head **30**.

Next, referring to FIG. **10**, an explanation of the three (3) directions of head rotation that the motion sensing device **28** is capable of detecting will be described. First, the motion sensing device **28** is configured to detect the rotation of the head **30** of the subject **18** about the yaw axis **66** of rotation as indicated by the curved arrow **72** in FIG. **10**. The curved arrow **72** about the yaw axis **66** indicates the common side-to-side movement of the subject's head **30** during the vision testing. Secondly, the motion sensing device **28** is configured to detect the rotation of the head **30** of the subject **18** about the pitch axis **62** of rotation as indicated by the curved arrow **68** in FIG. **10**. The curved arrow **68** about the pitch axis **62** indicates the up-and-down movement of the subject's head **30** during the vision testing. Thirdly, the motion sensing device **28** is configured to detect the rotation of the head **30** of the subject **18** about the roll axis **64** of rotation as indicated by the curved arrow **70** in FIG. **10**. The curved arrow **70** about the roll axis **64** indicates the tilt-right and tilt-left movement of the subject's head **30** during the vision testing. In addition to the ability to determine head rotation about all three (3) axes of rotation, the use of a three-dimensional motion sensing device **28** advantageously permits the determination of whether the subject **18** is rotating his or her head **30** purely about the desired axis of rotation (e.g., the yaw axis) or whether there is also off-axis rotation of the subject's head **30** during the prescribed rotation (e.g., the subject is rotating his or head **30** about a combination of the yaw axis and the roll axis, or about a combination of the yaw axis and the pitch axis). Because off-axis rotation may adversely affect the accuracy of the vision testing results, it is important to determine if off-axis rotation is present during the vision testing of the subject **18**. The utilization of a three-dimensional motion sensing device **28** enables the determination of this off-axis rotation.

Now, an illustrative manner in which the computing device **102**, **202**, **302** of the vision testing system **100**, **200**, **300** performs the head rotation calculations from the output of the motion sensing device **28** will be explained in detail. In particular, this calculation procedure will describe the manner in which the angular position and the angular velocity of the head of the subject **18** may be determined using the signals from the motion sensing device **28** (i.e., the head-mounted IMU) of the vision testing system **100**, **200**, **300**. As explained above, in one or more embodiments, the motion sensing device **28** may be in the form of an IMU, which includes the following three triaxial sensor devices: (i) a three-axis accelerometer sensing linear acceleration $\vec{a}'$, (ii) a three-axis rate gyroscope sensing angular velocity $\vec{\omega}'$, and (iii) a three-axis magnetometer sensing the magnetic north vector $\vec{n}'$. The motion sensing device **28** (i.e., the IMU) senses in the local (primed) frame of reference attached to the IMU itself. Because each of the sensor devices in the IMU is triaxial, the

vectors $\vec{a}'$, $\vec{\omega}'$, $\vec{n}'$ are each 3-component vectors. A prime symbol is used in conjunction with each of these vectors to symbolize that the measurements are taken in accordance with the local reference frame. The unprimed vectors that will be described hereinafter are in the global reference frame.

The objective of these calculations is to find the angular position or orientation $\vec{\theta}(t)$ and the angular velocity $\vec{\omega}(t)$ of the head of the subject **18** in the global, unprimed, inertial frame of reference. The initial orientation in the global frame of reference may be either known in advance or derived from $\vec{\Theta}_0$, as will be explained below with regard to the rotation transformation matrix.

For the purposes of the calculation procedure, a right-handed coordinate system is assumed for both global and local frames of reference. The global frame of reference is attached to the Earth. The acceleration due to gravity is assumed to be a constant vector $\vec{g}$. Also, for the purposes of the calculations presented herein, it is presumed the sensor devices of the inertial measurement unit (IMU) provide calibrated data. In addition, all of the one or more output signals from the IMU are treated as continuous functions of time. Although, it is to be understood the general form of the equations described herein may be readily discretized to account for IMU sensor devices that take discrete time samples from a bandwidth-limited continuous signal.

The angular velocity $\vec{\omega}(t)$ of the subject's head rotation is obtained by coordinate transformation using the IMU output signal(s) as follows:

$$\vec{\omega}(t)=\vec{\Theta}(t)\vec{\omega}'(t) \tag{1}$$

where $\vec{\Theta}(t)$ is the matrix of the rotation transformation that rotates the instantaneous local frame of reference into the global frame of reference.

The orientation $\vec{\theta}(t)$ of the subject's head rotation is obtained by single integration of the angular velocity using the IMU output signal(s) as follows:

$$\vec{\theta}(t)=\vec{\theta}_0+\int_0^t\vec{\omega}(t)dt \tag{2}$$

$$\vec{\theta}(t)=\vec{\theta}_0+\int_0^t\vec{\Theta}(t)\vec{\omega}'(t)dt \tag{3}$$

There are two aspects to the coordinate transformation matrix $\vec{\Theta}(t)$ calculation: (i) the initial value $\vec{\Theta}_0\equiv\vec{\Theta}(0)$ at t=0 and (ii) subsequent updates to this value. The updates may be integrated from the angular velocity, i.e., the time derivative $\dot{\Theta}$ of the rotation transformation matrix may be set as a function of the angular velocity, and then the coordinate transformation matrix becomes:

$$\vec{\Theta}(t)=\int_0^t\dot{\Theta}(\tau,\vec{\omega}'(\tau))d\tau \tag{4}$$

The value at any point in time may be derived from known local and global values of both the magnetic north vector and the acceleration of gravity. Those two vectors are usually non-parallel. This is the requirement for the $\vec{\Theta}(\vec{g}', \vec{n}', \vec{g}, \vec{n})$ to be unique. The knowledge of either of those vectors in isolation gives a family of non-unique solutions $\vec{\Theta}(\vec{g}', \vec{g})$ or $\vec{\Theta}(\vec{n}', \vec{n})$. Both are unconstrained in one component of rotation. The $\vec{\Theta}(\vec{g}', \vec{n}', \vec{g}, \vec{n})$ has many known implementations, with the common one being the Kabsch algorithm.

In one or more embodiments, if a known starting global orientation is assumed, and the time-derivative of the rotation transformation matrix as a function of the angular velocity in the local frame is used, it is possible to obtain the matrix without the need for the accelerometer and magnetometer in the IMU.

Advantageously, in one or more embodiments, the motion sensing device **28** described above requires no manual calibration step or setup time, other than putting the device **28** on the head **30** of the subject **18**. That is, there is no required manual calibration and/or tare step (e.g., to calibrate the accelerometer with respect to gravity and/or to zero the gyroscope) that must be performed prior to the execution of each particular test (i.e., a DVA or GST test). Obviating the need for manual calibration and/or a manual tare step advantageously saves valuable time during the execution of a particular test series. In order to avoid these laborious and tedious manual steps, at the beginning of every dynamic visual acuity (DVA) and gaze stabilization test (GST) trial, the motion sensing device **28** (i.e., inertial measurement unit **28**) is automatically re-tared (or re-zeroed) to the subject's head position at that time by the computing device **102**, **202**, **302**. With each of these zeroing events, the computing device **102**, **202**, **302** also checks the orientation of the motion sensing device **28** in order to make sure that it is on the subject's head **30** correctly and/or to make sure the subject **18** is still and has his or her head held in the correct orientation. The computing device **102**, **202**, **302** checks the orientation of the motion sensing device **28** by using the data from the linear accelerometer, and by determining which axis the gravity vector lies in. If the computing device **102**, **202**, **302** detects no issues with the orientation of the motion sensing device **28**, nothing happens on the subject or clinician screen (i.e., no message is displayed in order to save time). Conversely, if the computing device **102**, **202**, **302** determines that there is a problem with the orientation of the motion sensing device **28**, a flag pops up on the operator or clinician screen and the test will not begin (i.e., the DVA or GST test will not begin). In order to begin the test, the clinician must adjust the motion sensing device **28** or the subject's head **30** to the correct position and press "okay" on the keyboard **206**, **306** of the computing device **102**, **202**, **302** to dismiss the flag. Upon the "okay" input, the motion sensing device **28** will tare to its position at that time and the test will begin. In these one or more embodiments, the flag only pops up once per trial.

Also, advantageously, in these one or more embodiments, the motion sensing device **28** does not require a flat and/or still surface for using the motion sensing device **28** (i.e., the inertial measurement unit). In addition, in these one or more embodiments, the motion sensing device **28** does not comprise an electrical cord that operatively connects it to the computing device **102**, **202**, **302**. That is, the motion sensing device **28** is wirelessly coupled to the computing device **102**, **202**, **302** without the use of any electrical wires. Because the motion sensing device **28** is not tethered (i.e., it contains no electrical cord), it can advantageously accommodate various configurations and distances from the computing device **102**, **202**, **302**. In other words, the configuration of the vision testing system **100**, **200**, **300** in a room is not limited by the physical limitations imposed upon the system **100**, **200**, **300** by the fixed length of an electrical cord connecting the motion sensing device **28** to the computing device **102**, **202**, **302** (e.g., the electrical cord of a tethered motion sensing device **28** may be too short to accommodate a desired testing configuration).

Referring again to FIG. **1**, it can be seen that a clinician **14** is standing behind a subject **18** seated on a chair **20**. During the latter portion of the vision tests described herein, wherein

the subject's head **30** is to be displaced back-and-forth, the clinician **14** may move the subject's head **30** using her arms **32** so that the velocity and range of motion of the subject's head **30** is capable of being more accurately controlled. Alternatively, the subject **18** can move his own head **30** without the assistance of the clinician **14** during these portions of the test.

As shown in the illustrative embodiment of FIG. **1**, it can also be seen that the clinician **14** is provided with a user input device **24** attached to her waist via a belt or elastic band **22**. The user input device **24** is configured to output an input signal in response to a manipulation of the user input device by a system user (i.e., the clinician **14**). In the illustrative embodiment, the user input device **24** is operatively coupled to the laptop computing device **102** by wireless data transmission means. For example, the user input device **24** may comprise a wireless mouse that wirelessly communicates with the laptop computing device **102**. In other embodiments, the user input device may alternatively comprise (i) a keyboard (e.g., the keyboard of the laptop computing device **102** in FIG. **1** or the separate keyboards **206**, **306** in FIGS. **2** and **3**), (ii) a wireless clicking device, or (iii) a voice recognition device that allows the clinician **14** and/or the subject **18** to verbally input the subject's response (e.g., to record the subject's perceived orientation of the optotype).

During the vision testing of the subject **18**, after the subject **18** identifies the perceived configuration of the visual object **10** that is displayed on the visual display device **104**, the clinician **14** may use the user input device **24** in order to enter and transmit the subject's response (i.e., the perceived configuration of the visual object **10**) to the laptop computing device **102**. In one or more embodiments, the user input device **24** is configured to accept at least four different responses of the subject **18**, wherein each of the at least four different responses of the subject **18** correspond to different configurations of the visual object **10**. For example, turning to FIG. **5**, it can be seen that, if the visual object **10** is in the form of a Landolt C optotype, a first configuration of the visual object **10***a* is one in which the Landolt C is pointing up (see the top row of FIG. **5**), a second configuration of the visual object **10***b* is one in which the Landolt C is pointing to the left, a third configuration of the visual object **10***c* is one in which the Landolt C is pointing down, and a fourth configuration of the visual object **10***d* is one in which the Landolt C is pointing to the right. Then, referring to the middle row of FIG. **5**, it can be seen that these same four configurations of the Landolt C can be displayed on the visual display device **104** in a smaller overall size (e.g., Landolt C optotypes **10***e*, **10***f*, **10***g*, **10***h*). Finally, with reference to the bottom row of FIG. **5**, it can be seen that these same four configurations of the Landolt C can be displayed on the visual display device **104** in an even smaller overall size (e.g., Landolt C optotypes **10***i*, **10***j*, **10***k*, **10***l*). In addition to those optotypes explicitly illustrated in FIG. **5**, it is to be understood that at least four (4) other configurations of the Landolt C optotype are possible, namely configurations of the Landolt C optotype pointing in each of the four forty-five (45) degree angular positions (i.e., pointing up and to the left, pointing up and to the right, pointing down and to the left, and pointing down and to the right).

As another example, referring to FIG. **6**, it can be seen that, if the visual object **10'** is in the form of a Tumbling E optotype, a first configuration of the visual object **10'***a* is one in which the Tumbling E is pointing up (see the top row of FIG. **6**), a second configuration of the visual object **10'***b* is one in which the Tumbling E is pointing down, a third configuration of the visual object **10'***c* is one in which the Tumbling E is pointing to the right, and a fourth configuration of the visual object **10'***d* is one in which the Tumbling E is pointing to the left. Next, referring to the middle row of FIG. **6**, it can be seen that these same four configurations of the Tumbling E can be displayed on the visual display device **104** in a smaller overall size (e.g., Tumbling E optotypes **10'***e*, **10'***f*, **10'***g*, **10'***h*). Finally, with reference to bottom row of FIG. **6**, it can be seen that these same four configurations of the Tumbling E can be displayed on the visual display device **104** in an even smaller overall size (e.g., Tumbling E optotypes **10'***i*, **10'***j*, **10'***k*, **10'***l*).

A second exemplary embodiment of a vision testing system is seen generally at **200** in FIG. **2**. Referring to this figure, it can be seen that, in some respects, the second exemplary embodiment is similar to that of the first embodiment. Moreover, some elements are common to both such embodiments. For the sake of brevity, the parts that the second embodiment of the vision testing system has in common with the first embodiment will only be briefly mentioned, if at all, because these components have already been explained in detail above. Furthermore, in the interest of clarity, these components will be denoted using the same reference characters that were used in the first embodiment.

In the illustrative embodiment of FIG. **2**, the vision testing system **200** generally comprises a computing device **202** (i.e., a data processing device or a data acquisition and processing device that is capable of collecting, storing, and processing data), which in turn, is operatively coupled to a first visual display device **204**, a force measurement assembly **212**, and a second visual display device **220**. In FIG. **2**, the first visual display device **204** is disposed on an adjustable height cart **210** so that the height of the first visual display device **204** is selectively adjustable by a user. Similar to that described above in conjunction with the first exemplary embodiment, the height of the cart **210** may be adjusted prior to each test session such that the center of the first visual display device **204**, which contains the one or more visual objects **10**, is generally horizontally aligned with the eyes of the seated subject **18** (i.e., so the subject **18** is looking straight at the visual object **10** on the visual display device **204** during the testing).

As shown in FIG. **2**, the computing device **202** includes a plurality of user input devices **206**, **208** connected thereto. Preferably, the user input devices **206**, **208** comprise a keyboard **206** and a mouse **208**. The first visual display device **204** may also serve as a user input device if it is provided with touch screen capabilities. In addition, a wireless user input device may also be operatively coupled to the computing device **202**. The wireless user input device may be in the form of a wireless mouse **24**, such as that described above in conjunction with the first illustrative embodiment.

Unlike the first exemplary embodiment of the vision testing system **100**, the second exemplary embodiment of the vision testing system **200** further includes a force measurement assembly **212** for measuring the ground reaction forces and/or moments of the subject **18**. In particular, the force measurement assembly **212** comprises a dual force plate **214** that is fixedly mounted to a rotatable carriage **218**, which in turn is mounted to a translatable sled **222**. The dual force plate **214** comprises a plurality of force transducers or load cells for measuring the forces and/or moments generated on the two plate surfaces thereof by respective feet of the subject **18**. As such, the center of pressure (COP), center of gravity (COG), and/or sway angle of the subject **18** may be determined while the subject undergoes testing on the force measurement assembly **212**. The rotatable carriage **218** with the dual force plate **214** mounted thereto rotates about a transverse rotational axis that generally passes through the ankles of the subject **18** when the subject **18** is disposed on the dual force plate **214**. Thus, the transverse rotational axis about which the

rotatable carriage **218** rotates is disposed above the surface of the dual force plate **214**. The rotatable carriage **218** rotates within, and relative to the translatable sled **222**. As such, when the translatable sled **222** is translated backwards-and-forwards relative to the stationary base portion **216**, the rotatable carriage **218** and the dual force plate **214** are translated as well. Because the dual force plate **214** of the force measurement assembly **212** is capable of being displaced (i.e., rotated and translated), the force measurement assembly **212** is in the form of a dynamic force measurement assembly that is capable of displacing the subject **18** while he or she stands in a generally stationary position on the top surface of the dual force plate **214**. The force measurement assembly **212** is described in detail in U.S. Pat. Nos. 8,704,855 and 8,847,989, the entire disclosures of which are incorporated herein by reference.

In one or more embodiments, the results of the tests performed on the force measurement assembly **212** may be combined with the results of the vision tests performed using the vision testing system **200** to arrive at a combined or composite balance score for the subject **18** (e.g., by using the data processing device **202** to perform the computations). In addition, in some embodiments, the motion sensing device **28** of the vision testing systems **100**, **200** may be used to measure the head movement of the subject **18** while he or she undergoes balance testing on the force measurement assembly **212**. For example, the head movement of the subject **18** may be determined using the motion sensing device **28** during the performance of a balance assessment protocol, such as the Sensory Organization Test ("SOT").

Referring again to FIG. **2**, it can be seen that force measurement assembly **212** is provided with a second visual display device **220** thereabove. As shown in FIG. **2**, the second visual display device **220** is generally hemispherical in shape such that it is capable of circumscribing at least three sides of the torso of the subject **18**. Specifically, the subject **18** stands in the cutout **222** at the bottom of the second visual display device **220** so that he is able to become completely immersed in a virtual reality scenario that is displayed on the hemispherical projection screen of the second visual display device **220**. Also, in one or more other embodiments, the vision testing of the subject **18** may be alternatively performed on the hemispherical visual display device **220**, rather than on the generally planar visual display device **204**. For example, the chair **20** on which the subject **18** is seated may be moved to a location in front of the second visual display device **220**.

A third exemplary embodiment of a vision testing system is seen generally at **300** in FIG. **3**. Referring to this figure, it can be seen that, in some respects, the third exemplary embodiment is similar to that of the first and second embodiments. Moreover, some elements are common to all of these embodiments. For the sake of brevity, the parts that the third embodiment of the vision testing system has in common with the first and second embodiments will only be briefly mentioned, if at all, because these components have already been explained in detail above. Furthermore, in the interest of clarity, these components will be denoted using the same reference characters that were used in the first two embodiments.

In the illustrative embodiment of FIG. **3**, the vision testing system **300** generally comprises a computing device **302** (i.e., a data processing device or a data acquisition and processing device that is capable of collecting, storing, and processing data), which in turn, is operatively coupled to a first visual display device **304** by an electrical cable or wire **314**, and to a second visual display device **312** by an electrical cable or wire **316**. As shown in FIG. **3**, the computing device **302** includes a plurality of user input devices **306**, **308** connected thereto. Preferably, the user input devices **306**, **308** comprise a keyboard **306** and a mouse **308**. The first visual display device **304** may also serve as a user input device if it is provided with touch screen capabilities. In addition, a wireless user input device may also be operatively coupled to the computing device **302**. The wireless user input device may be in the form of a wireless mouse **24**, such as that described above in conjunction with the first illustrative embodiment.

In FIG. **3**, the second visual display device **312** is disposed on an adjustable height cart **318** so that the height of the second visual display device **312** is selectively adjustable by a user. Similar to that described above in conjunction with the preceding two exemplary embodiments, the height of the cart **318** may be adjusted prior to each test session such that the center of the second visual display device **312**, which contains the one or more visual objects **10**, is generally horizontally aligned with the eyes of the seated subject **18** (i.e., so the subject **18** is looking straight at the visual object **10** on the visual display device **312** during the testing). Also, cart **310**, on which the computing device **302**, the first visual display device **304**, and the user input devices **306**, **308** are mounted, may also be provided height adjustment capabilities.

Now, turning to FIG. **4**, it can be seen that the data acquisition/data processing devices (i.e., the computing devices **102**, **202**, **302**) of the vision testing systems **100**, **200**, **300** each comprise a microprocessor **34** for processing data, memory **36** (e.g., random access memory or RAM) for storing data during the processing thereof, and data storage device(s) **38**, such as one or more hard drives, compact disk drives, floppy disk drives, flash drives, or any combination thereof. As shown in FIG. **4**, the motion sensing device **28** and the first visual display device **104**, **204**, **304** are operatively coupled to the computing devices **102**, **202**, **302** such that data is capable of being transferred between these devices. Also, as illustrated in FIG. **4**, a plurality of data input devices **24**, **206**, **208**, **306**, **308**, such as the wireless mouse **24**, keyboards **206**, **306**, and mouse devices **208**, **308**, are operatively coupled to the computing devices **102**, **202**, **302** so that a user is able to enter data into the computing devices **102**, **202**, **302**. In some embodiments, computing devices may be in the form of a desktop computer (as illustrated in FIGS. **2** and **3**), while in other embodiments, the computing devices may be embodied as a laptop computer (as shown in FIG. **1**).

Referring again to FIG. **4**, it can be seen that some embodiments of the vision testing system may also include a second visual display **220**, **312** that is operatively coupled to the computing device **202**, **302** of the system (e.g., refer to FIGS. **2** and **3**). Also, as illustrated in FIG. **2**, some of the vision testing systems may further include a force measurement assembly **212** operatively coupled to the computing device **202**, **302** of the system. While a dynamic-type force measurement assembly **212** is shown in FIG. **2**, it is to be understood that static-type force measurement assemblies (e.g., static force plates) may also be operatively coupled to the computing device of the vision testing systems as well. In addition, with reference again to FIG. **4**, it can be seen that an auditory output device **40** may also be operatively coupled to the computing device **102**, **202**, **302** of the vision testing systems **100**, **200**, **300**. The auditory output device **40** may comprise one or more speakers or an audio headset that is configured to be worn by the subject **18**. During the latter portion of the vision testing wherein the subject **18** displaces his or her head, the computing device **102**, **202**, **302** may be specially programmed to generate and output a first audible indicator (e.g., a first series of beeps) via the auditory output device **40** that indicates whether or not the velocity or speed at which the

subject **18** is displacing his or her head lies within a predetermined range. Also, during the latter portion of the vision testing wherein the subject **18** displaces his or her head, the computing device **102**, **202**, **302** may be specially programmed to generate and output a second audible indicator (e.g., a second series of beeps) via the auditory output device **40** that indicates whether or not the subject **18** is displacing his or her head over a prescribed range of motion.

As an alternative to, or in addition to, generating instructional cues for the subject **18** using the auditory output device **40**, the computing device **102**, **202**, **302** may be specially programmed to generate and display a first visual indicator (e.g., a change in the color of a selected area) on the output screen of the visual display device **104**, **204**, **312** that indicates whether or not the velocity or speed at which the subject **18** is displacing his or her head lies within the predetermined range. Also, as an alternative to, or in addition to, generating instructional cues for the subject **18** using the auditory output device **40**, the computing device **102**, **202**, **302** may be specially programmed to generate and display a second visual indicator (e.g., a displaceable dot indicator) on the output screen of the visual display device that indicates whether or not the subject **18** is displacing his or her head over a prescribed range of motion.

Several examples of visual indicators that may be used in conjunction with the embodiments of the vision testing system are illustrated in FIGS. **7-9** and **21-24**. First, turning to the first screen image **42** in FIG. **7**, it can be seen that an optotype **10** in the form of a Landolt C may be provided within a circle **12** in the approximate center of the screen. The interior of the circle **12** may be provided with a first visual indicator **50** for indicating whether or not the velocity or speed at which the subject **18** is displacing his or her head lies within the predetermined range. For example, in one embodiment, the predetermined range for the velocity or speed of the subject's head may be between about 60 degrees per second and about 180 degrees per second (or between 60 degrees per second and 180 degrees per second). As another example, in a further embodiment, the predetermined range for the velocity or speed of the subject's head may be between about 85 degrees per second and about 120 degrees per second (or between 85 degrees per second and 120 degrees per second). In the illustrative embodiment of FIG. **7**, the first visual indicator **50** comprises a change in a color of the area circumscribed by the circle **12**. More particularly, the change in the color of the area circumscribed by the circle **12** comprises changing the circular region of the screen image **42** from a first color to a second color depending on whether or not the subject **18** is moving his or her head within the predetermined range. In FIG. **7**, because this is a black-and-white image, the change in the color of the circular visual indicator **50** is indicated through the use of a hatching pattern (i.e., a diagonal hatching pattern). In one exemplary embodiment, the first color of the circular visual indicator **50** is red (e.g., bright red) when the velocity or speed of the subject's head lies outside of the predetermined range, while the second color of the circular visual indicator **50** is green when the velocity or speed of the subject's head lies within the predetermined range.

Referring again to FIG. **7**, the second visual indicator **48** for indicating whether or not the subject is displacing his or her head over a prescribed range of motion will be explained. As shown in the illustrative example of FIG. **7**, the second visual indicator **48** generally comprises a dot-like indicator that is displaced between first and second range of motion boundary lines **44**, **46**. As shown in FIG. **7**, the first boundary line **44** extends from the left side of the circle **12**, while the second boundary line **46** extends from the right side of the circle **12**. Also, it can be seen that the first and second boundary lines **44**, **46** are spaced approximately 180 degrees apart in FIG. **7**. The dot-like visual indicator **48** is displaced in accordance with the movement of the head **30** of the subject **18**, as detected by the motion sensing device **28**. For example, in one embodiment, the first boundary line **44** indicates a 20 degree rotation of the subject's head **30** to the left, while the second boundary line **46** indicates a 20 degree rotation of the subject's head **30** to the right. That is, if the subject **18** displaces his or her head **30** less than 20 degrees to the left, then the dot-like visual indicator **48** would not reach the first boundary line **44**. Similarly, if the subject **18** displaces his or her head **30** less than 20 degrees to the right, then the dot-like visual indicator **48** would not reach the second boundary line **46**. If the subject's head **30** is facing straight ahead (i.e., not displaced to either the right or left), then dot-like visual indicator **48** is located at the top of the circle **12** (i.e., approximately 90 degrees from the first boundary line **44** and approximately 90 degrees from the second boundary line **46**). Advantageously, the second visual indicator **48** provides visual feedback to the subject **18** and the clinician **14** in order to inform the subject **18** and the clinician **14** as to whether or not the subject **18** is sufficiently displacing his or her head **30**.

Next, with reference to the second screen images **42'** in FIGS. **8**A and **8**B, another exemplary type of first visual indicator will be described. Like the screen image **42** of FIG. **7**, the screen images **42'** comprise an optotype **10** in the form of a Landolt C within a circle **12** in the approximate center of the screen. However, unlike the screen image **42** of FIG. **7**, the circle **12** surrounding the optotype **10** in FIGS. **8**A and **8**B is circumscribed by an outer circle **52**, thereby defining an annular space between the inner and outer circles **12**, **52**. As shown in FIGS. **8**A and **8**B, the annular space between the inner and outer circles **12**, **52** is divided into an upper half and a lower half by first and second boundary lines **54**, **56**. The upper half of the annular space between the inner and outer circles **12**, **52** is further divided into a right and left section by top dividing line **58**. The right and left sections of the annular upper half between the inner and outer circles **12**, **52** are provided with a sliding bar visual indicator **60** in order to indicate whether or not the velocity or speed at which the subject **18** is displacing his or her head lies within the predetermined range. For example, referring first to FIG. **8**A, the displacement of the sliding bar visual indicator **60** is controlled by the velocity or speed of the subject's head **30**. That is, if the subject **18** is displacing his or her head **30** at a slow speed, the sliding bar visual indicator **60** will only travel a small distance from the center dividing line **58**. In contrast, if the subject **18** is displacing his or her head **30** at a high speed, the sliding bar visual indicator **60** will travel a large distance from the center dividing line **58**. Also, because the sliding bar visual indicator **60** is located in the left section of the top annular portion in FIG. **8**A, it indicates that the subject's head **30** is being displaced to the left, as detected by the motion sensing device **28**. In contrast, when the sliding bar visual indicator **60** is located in the right section of the top annular portion as in FIG. **8**B, it indicates that the subject's head **30** is being displaced to the right, rather than the left. In addition, if the subject **18** displaces his or her head **30** at a velocity that is higher than the predetermined range, the sliding bar visual indicator **60** is changed from a first color to a second color to indicate a saturation of the head velocity or speed. In FIG. **8**A, because this is a black-and-white image, the change in the color of the sliding bar visual indicator **60** is indicated through the use of a hatching pattern (i.e., a diagonal hatching pattern). In one exemplary embodiment, the first color of the sliding bar visual indicator **60** is red (e.g., bright red) when the velocity

or speed of the subject's head exceeds the predetermined range (i.e., when it is saturated), while the second color of the sliding bar visual indicator **60** is green when the velocity or speed of the subject's head lies within the predetermined range (i.e., it is not saturated).

The second visual indicator **48** in FIGS. **8**A and **8**B, which indicates whether or not the subject is displacing his or her head over a prescribed range of motion, is very similar to that described above in conjunction with FIG. **7**. Like the second visual indicator **48** of FIG. **7**, the second visual indicator **48** of FIGS. **8**A and **8**B is also in the form of a dot-like visual indicator. In addition, the first and second boundary lines **44'**, **46'** are generally the same as the first and second boundary lines **44**, **46** of FIG. **7**, except that each boundary line **44'**, **46'** extends outwardly from the opposed sides of the outer circle **52** in FIGS. **8**A and **8**B, rather than from the opposed sides of the inner circle **12**.

Now, referring to third screen image **42"** in FIG. **9**, yet another exemplary type of first visual indicator will be described. Like the screen images **42**, **42'** of FIGS. **7** and **8**A-**8**B, the screen image **42"** comprises an optotype **10** in the form of a Landolt C within a circle **12** in the approximate center of the screen. However, unlike the screen image **42** of FIG. **7**, the circular region within the circle **12** is not provided with changing colors. Rather, the circular region within the circle **12** has a consistent white background (i.e., it does not change during the test), while the color of the background region **51** outside of the circle **12** changes depending upon the sensed velocity or speed of the subject's head **30**. More particularly, the change in the color of the background region **51** outside of the circle **12** comprises changing the background region **51** of the screen image **42"** from a first color to a second color depending on whether or not the subject **18** is moving his or her head within the predetermined range. In FIG. **9**, because this is a black-and-white image, the change in the color of the background region **51** outside of the circle **12** is indicated through the use of a hatching pattern (i.e., a diagonal hatching pattern). In one exemplary embodiment, the first color of the background region **51** is red (e.g., bright red) when the velocity or speed of the subject's head lies outside of the predetermined range, while the second color of the background visual indicator **51** is green when the velocity or speed of the subject's head lies within the predetermined range.

Unlike the screen images **42**, **42'** of FIGS. **7** and **8**A-**8**B, it can be seen that the screen image **42"** does not include a second visual indicator **48** for indicating whether or not the subject **18** is displacing his or her head over a prescribed range of motion. Rather, the screen image **42"** only includes the first visual indicator **51** for indicating whether or not the subject **18** is moving his or her head within the predetermined velocity range. Other exemplary visual indicators for indicating whether the subject displaces his or her head within the prescribed velocity range will be described hereinafter in conjunction with the description of the dynamic visual acuity testing procedure.

2. Dynamic Visual Acuity Testing Procedure

In accordance with an embodiment of the invention, a flowchart illustrating a procedure for testing the dynamic visual acuity of a subject carried out by the systems is set forth in FIGS. **11**A, **11**B, and **12**. Referring initially to FIG. **11**A, the procedure commences at **400** (e.g., after the operator or clinician enters a start command to the computing device **102**, **202**, **302** by depressing a particular key on the keyboard), and in step **402**, the subject is positioned in front of the output screen of the visual display device **104**, **204**, **304** such that a visual object **10** (e.g., an optotype) is visible to the subject **18**. Then, while the subject **18** maintains a generally fixed position of his or her head **30** (i.e., keeping his or her head **30** as still as possible), one or more configurations of the visual object **10** having a first initial size are displayed on the output screen of the visual display device **104**, **204**, **304** in step **404**. For example, referring to FIG. **5**, one or more configurations **10***e*, **10***f*, **10***g*, **10***h* of the Landolt C optotype may be displayed one-at-time on the output screen of the visual display device **104**, **204**, **304**. In an alternative exemplary embodiment, with reference to FIG. **6**, one or more configurations **10'***e*, **10'***f*, **10'***g*, **10'***h* of the Tumbling E optotype may be displayed one-at-time on the output screen of the visual display device **104**, **204**, **304**. In other exemplary embodiments, other suitable optotypes may be used in place of the Landolt C or the Tumbling E, such as letters of a recognized alphabet (e.g., the English alphabet). In one or more embodiments, the visual object (i.e., optotype) having the first initial size is displayed within approximately 500 milliseconds after the operator or clinician enters the start command to the computing device **102**, **202**, **302**. The visual object (i.e., optotype) having the first initial size may be sufficiently large so that nearly all of the subjects tested will correctly identify the configuration of the first optotype that is displayed on the screen, and may be displayed for a time duration of approximately 500 milliseconds on the screen. After the visual object (i.e., optotype) disappears from the output screen of the visual display device **104**, **204**, **304**, the computing device **102**, **202**, **302** may be specially programmed to implement a wait state, wherein the computing device **102**, **202**, **302** waits for the operator or clinician to record the subject's response.

An exemplary operator or clinician screen image **600**, which may be displayed on the visual display device **104**, **204**, **304** during the first set of successive trials when the subject **18** maintains the generally fixed position of his or her head **30**, is shown in FIG. **15**. In one or more embodiments, the computing device **102**, **202**, **302** may be specially programmed to generate the screen image **600** of FIG. **15** during the performance of this first portion of the test. With reference to FIG. **15**, it can be seen that testing guidelines **602** may be displayed at the top of the screen image **600**. The testing guidelines may specify a suggested distance or distance range (e.g., approximately ten (10) feet or between eight (8) and sixteen (16) feet) for the placement of the subject **18**), visual display device height adjustment instructions, and additional instructions regarding the readiness of the subject. In one or more embodiments, the computing device **102**, **202**, **302** may be specially programmed to prompt the operator or clinician to input the distance between the forehead of the subject and the front of the visual display device screen (e.g., in feet from the front of the screen). The default test setting for the distance may be ten (10) feet, while the computing device **102**, **202**, **302** may be specially programmed to accept a range of distances between eight (8) and sixteen (16) feet, inclusive. The computing device **102**, **202**, **302** also may be specially programmed to generate a checkbox on the output screen of the visual display device screen that may be checked when the subject **18** wears progressive lenses (e.g., glasses or contact lens for vision correction). As additionally shown in FIG. **15**, a graph **604** is also displayed in the center of the screen in order to visually illustrate the optotype size for each successive trial while the subject's head **30** remains stationary. That way, the operator or clinician is able to easily view the subject's performance during the progression of the testing. As shown in FIG. **15**, the y-axis **610** of the graph **604** is the optotype size (e.g., in log MAR or relative log MAR), while the x-axis **612** of the graph **604** is the trial number of the first set of successive trials (i.e., while the head **30** of the subject **18** remains stationary). In the graph **604** of FIG. **15**, it can be seen

that, after the highly variable beginning of the test, the stimulus level curve **611** tends to oscillate above and below an optotype size of approximately 0.20. Referring again to FIG. **15**, it can be seen that the small box **606** on the right center of the clinician screen image **600** is configured to display the optotype size (e.g., in log MAR or relative log MAR) during the current trial of the testing procedure. Advantageously, the display of the optotype size in the small box **606** allows the clinician to quickly ascertain the subject's current performance level during the execution of the test. In the screen image **600** of FIG. **15**, selected test summary data **608** is displayed below, and to the left of the graph **604** on the screen. For example, as shown in FIG. **15**, the test summary data **608** may include the optotype size in units of log MAR. In one or more embodiments, some values of the test summary data may be automatically completed as each of the test portions is successively completed (e.g., static visual acuity, visual processing time, dynamic visual acuity, and gaze stabilization).

With reference to FIGS. **16** and **17**, exemplary subject screen images **614**, **626**, which may be displayed on the visual display device **104**, **204**, **304** during the first set of successive trials when the subject **18** maintains the generally fixed position of his or her head **30**, will now be explained. Initially, referring to FIG. **16**, it can be seen that a set of instructions **616** for the subject or patient may be displayed at the top of the screen image **614**. The subject or patient instructions may specify that the manner in which the subject or patient is supposed to carry out the test (e.g., by instructing the patient to sit still and focus on the circle **618**, and by instructing the patient to indicate the orientation of the optotype after it disappears from the screen). The set of instructions **616** may be initially displayed on the output screen by the computing device **102**, **202**, **302**, and then subsequently hid from view (i.e., suppressed thereafter) so as not to unnecessarily distract the subject **18** during the testing. As additionally shown in FIG. **16**, a solid black circle **618** is displayed in the approximate center of the screen. The solid black circle **618** comprises a plurality of crosshairs **620** disposed therein (e.g., spaced 90 degrees apart from one another, and disposed at 0 degrees, 90 degrees, 180 degrees, and 360 degrees), and extending inwardly towards the center of the circle **618**. Referring again to FIG. **16**, it can be seen that, in the bottom right-hand corner of the screen, the number of trials **622** completed thus far, together the maximum number of trials **624** that may be completed during the first set of successive trials is displayed. Because FIG. **16** depicts the starting screen image **614** for the first set of successive trials (i.e., when the subject's head is stationary), the number **622** is zero (0) in FIG. **16**. In this illustrative embodiment, the maximum number of trials **624** performed in conjunction with the first set of successive trials is fourteen (14). However, it is to be understood that, in other embodiments of the invention, the maximum number of trials **624** performed in conjunction with the first set of successive trials may be higher or lower than fourteen (14). Also, in an alternative embodiment, the small box **606** with the optotype size described above in conjunction with FIG. **15** and the small box **634** with the optotype display time described below in conjunction with FIG. **18** may be placed in the bottom right-hand corner of the screen **614**, rather than the number of trials **622** completed thus far, and the maximum number of trials **624**. In this alternative embodiment, the number of trials **622** completed thus far, and the maximum number of trials **624** are placed in the test summary data **608** on the operator or clinician screen **600**. Turning to FIG. **17**, it can be seen that the screen image **626** is generally the same as the screen image **614** of FIG. **16**, except that an optotype **10'** is displayed in the center of the circle **618**. While a Tumbling E optotype is utilized in the illustrative embodiment of FIG. **17**, it is to be understood that, in an alternative embodiment, a Landolt C optotype or another type of optotype may be used in place of the Tumbling E optotype. In the exemplary screen image **626** of FIG. **17**, it can be seen that the optotype is pointing to the left, so a correct identification of the optotype by the subject or patient would require that he or she indicates that the optotype is pointing to the left. In addition, as depicted in FIG. **17**, the number of trials **622** is equal to one (1) in order to indicate that the subject or patient has completed one trial of the first set of successive trials (i.e., when the subject's head is stationary).

The circle **618** depicted in FIGS. **16** and **17**, which is generated by the computing device **102**, **202**, **302**, is large enough to fit the largest size optotype that will be displayed to the subject or patient during the static testing. The crosshairs **620** extend inward in order to prevent the circle **618** from needing to change size. Advantageously, in order to avoid becoming a distraction to the subject during the testing, the size of the circle **618** remains constant (i.e., it is static). Because the size of the circle **618** is constant during the testing, it must be large enough to accommodate the largest optotype that will be displayed to the subject during the testing. Consequently, this results in a circle **618** that is significantly larger than the smallest sized optotypes displayed during the testing, which in turn, makes it difficult for the subject to tell where the small sized optotypes will appear on the screen. The subject's ability to find the optotype on the screen is not something that it is desired to be factored into the testing. Thus, the crosshairs **620** are provided within the circle **618** in order to help direct the gaze of the subject or patient during the display of the optotype, especially that of a small optotype. Like the circle **618**, the crosshairs **620** are static during the testing (i.e., they do not undergo changes in size or shape) so as not to distract the subject during the testing. Also, as best shown in FIG. **16**, the crosshairs **620** do not extend all the way to the center of the circle **618** so as to prevent them from interfering with the display of the small optotypes. In addition, both the circle **618** and the crosshairs **620** remain on the output screen of the visual display device throughout the duration of the testing.

Now, turning again to FIG. **11**A, in step **406**, the computing device or data processing device **102**, **202**, **302** determines whether or not the subject **18** correctly identifies one or more configurations (e.g., **10'***e*, **10'***f*, **10'***g*, **10'***h*) of the visual object **10'** having the first initial size. For example, the subject **18** may be presented with one or more optotypes having the first initial size (e.g. a single optotype **10'***g* pointing down). This optotype **10'***g* is of the first initial size, which may be a size scale factor of 0.75. After the optotype is displayed to the subject **18**, the subject **18** or the clinician **14** may utilize a user input device **24** (e.g., a wireless mouse) in order to transmit the response of the subject **18** to the computing device **102**, **202**, **302** (e.g., the wireless mouse may have four buttons, each of which corresponds to one of the four configurations of the optotype). Alternatively, the response of the subject **18** may be entered using the keyboard of the computing device **102**, **202**, **302** by using the directional arrows and space bar on the keyboard. For example, the "up" arrow key on the keyboard is used to record an optotype pointing up, the "down" arrow key on the keyboard is used to record an optotype pointing down, the "left" arrow key on the keyboard is used to record an optotype pointing to the left, the "right" arrow key on the keyboard is used to record an optotype pointing to the right, and the spacebar is used to record an unknown orientation of the optotype. If the spacebar is depressed on the keyboard, the computing device **102**, **202**, **302** randomly

chooses the response of the subject **18**. After receiving the subject's response, the computing device **102**, **202**, **302** is specially programmed to determine if the subject correctly determined the configuration of the optotype that was displayed on the output screen of the visual display device **104**, **204**, **304**. For example, if the optotype **10'***g* of FIG. **6** was displayed on the screen, the subject **18** must indicate that optotype is pointing down to get the identification correct. Any other answer would be incorrect for this configuration of the optotype. Once the subject's answer or response is evaluated as to its correctness, the computing device **102**, **202**, **302** is specially programmed to record whether or not the subject **18** identified the optotype correctly. In one exemplary embodiment, if the subject **18** identifies the configuration of the optotype **10'***g* correctly, the computing device **102**, **202**, **302** is specially programmed to display one or more optotypes having a physical size that is smaller than the first optotype (e.g., the second trial may comprise one or more optotypes that have a size scale factor of 0.6875). For example, the second optotype may comprise the optotype **10'***j* in FIG. **6**, which has a smaller size than the optotype **10'***g* in the middle row of FIG. **6**. Conversely, if the subject **18** identifies the configuration of the first optotype **10'***g* incorrectly, the computing device **102**, **202**, **302** is specially programmed to display one or more optotypes having a physical size that is larger than the first optotype (e.g., the second optotype may have a size scale factor of 1.0). For example, in this case, the second optotype may comprise the optotype **10'***c* in the top row of FIG. **6**, which has a larger size than the optotype **10'***g* in the middle row of FIG. **6**. In one or more embodiments, as described hereinafter, the computing device **102**, **202**, **302** is specially programed to execute a parameter estimation algorithm (e.g., Best-PEST algorithm) in order to determine the physical size of the successive optotype that is displayed on the output screen of the visual display device **104**, **204**, **304**. Also, in one or more embodiments, the computing device **102**, **202**, **302** is specially programmed to display the successive optotype on the screen approximately five-hundred (500) seconds after it receives the subject's response regarding the preceding optotype.

In this manner, as specified in step **408** of FIG. **11**A, the computing device **102**, **202**, **302** is specially programmed to incrementally decrease or increase the size of the visual object on the output screen of the visual display device **104**, **204**, **304** during a first set of successive trials (e.g., during a maximum number **624** of fourteen (14) trials as indicated in FIGS. **16** and **17**). For example, if the subject identifies the configuration of a particular-sized optotype correctly, the optotype size of the next optotype displayed on the screen is generally decreased, while the optotype size of the next optotype displayed on the screen is generally increased if the subject fails to identify the configuration of the optotype correctly. In the exemplary embodiment, after each optotype is displayed on the output screen of the visual display device **104**, **204**, **304**, the computing device **102**, **202**, **302** is specifically programmed to determine whether or not the subject **18** correctly identified the configuration of the optotype.

In one or more embodiments, the size of the visual object presented to the subject **18** during the first set of successive trials generally changes with each successive trial (e.g., the subject **18** does not receive five (5) optotypes of the same size in consecutive order during the testing). Similarly, the size of the visual object presented to the subject **18** during the dynamic DVA trials, as described hereinafter, generally changes with each successive trial (e.g., the subject **18** does not receive five (5) optotypes of the same size in consecutive order during the DVA testing). Also, during the dynamic series of trials during the GST, which will be described hereinafter, the target angular velocity range generally changes with each successive trial (e.g., the subject **18** does not perform five (5) optotype identifications for the same angular velocity range in consecutive order during the GST).

In step **410** of FIG. **11**A, after the subject **18** has completed a predetermined number of trials of optotype identification, the computing device **102**, **202**, **302** is specifically programmed to determine a size parameter (e.g., a size scale factor) of a first threshold version of the optotype based upon the performance of the subject **18** during the first set of successive trials during which the subject **18** maintained the generally fixed position of his or her head **30**. For example, after a particular end condition is reached, the computing device **102**, **202**, **302** determines that the first threshold version of the optotype has a size scale factor of 0.40. In one embodiment, the size scale factor of the first threshold version of the optotype is a calculated value that is determined using one or more statistical equations or formulas (e.g., using a Best-PEST algorithm as described hereinafter).

The computing device **102**, **202**, **302** may be specifically programmed with multiple end conditions for determining when to end the first set of successive trials. For example, the computing device **102**, **202**, **302** may automatically stop the first set of successive trials as soon as any one or combination of the following conditions occur: (i) the subject has completed a total of fourteen (14) trials of optotype identification (i.e., a maximum allowable number of trials is reached), (ii) a predetermined number of reversals has occurred, or (iii) the user has stopped the first set of successive trials (e.g., the operator or clinician initiates the cessation of the successive trials by depressing a particular key on the keyboard).

In one or more embodiments, the computing device **102**, **202**, **302** may be specially programmed to automatically stop the first set of successive trials when both the computed number of reversals for the test series has exceeded the predetermined number of reversals and the computed number of trials for the test series has exceeded the predetermined number of trials. Initially, the manner in which the total number of reversals is calculated by the computing device **102**, **202**, **302** will be explained. During the vision testing, a reversal is determined in accordance with the following equation:

$$\text{diff}=[y(i-1)-y(i)]*[y(i)-y(i+1)] \quad (5)$$

where:

diff: product of the slope before and after a stimulus point;

y(i): stimulus value at trial number i;

y(i−1): stimulus value for the trial preceding trial number i;

y(i+1): stimulus value for the trial following trial number i;

i: trial number for which the reversal is being determined.

After computing the difference value determined using equation (5) for a given trial number, if it is determined by the computing device **102**, **202**, **302** that the difference value is less than or equal to zero, then the reversal counter is incremented using the following equation:

$$\text{rev}=\text{rev}+1 \quad (6)$$

That is, the reversal number counter is incremented by one. Conversely, if it is determined by the computing device **102**, **202**, **302** that the difference value is greater than zero, then the reversal counter is not incremented and the number of reversals stays the same. Also, if the computed difference value is less than or equal to zero, and thus the reversal counter is incremented, the computing device **102**, **202**, **302** may be specially programmed to next determine if the total computed number of reversals is greater than or equal to the predetermined number of reversals that has been set (e.g., a total

number of eight (8) reversals). After which, the computing device **102**, **202**, **302** may be specially programmed to further determine if the total number of trials that have been completed (value of i) is greater than or equal to a predetermined number of trials (e.g., fourteen (14) trials of optotype identification). When both the total computed number of reversals is greater than or equal to the predetermined number of reversals (e.g., eight (8) reversals), and the total number of trials that have been completed is greater than or equal to the predetermined number of trials (e.g., fourteen (14) trials), then the computing device **102**, **202**, **302** may be specially programmed to automatically stop the first set of successive trials of the vision testing. It is to be understood that the abovedescribed procedure may be used to determine the stopping point of the visual processing time, DVA, and GST series of successive trials as well.

For example, referring to the graph **704** in FIG. **26**, the computing device **102**, **202**, **302** would determine that a total number of eleven (11) reversals have occurred during the testing series by using equation (5) above.

Then, in step **412** of FIG. **11**A, the computing device **102**, **202**, **302** is specifically programmed to generate a quantitative assessment of the subject's performance during the first set of successive trials, and finally, in step **414** of FIG. **11**A, to output the quantitative assessment of the subject's performance during the first set of successive trials on the output screen of the visual display device **104**, **204**, **304**. For example, in an exemplary embodiment, the computing device **102**, **202**, **302** may generate a report **700**, such as that illustrated in FIG. **26**, in order to display the test results from the first set of successive trials.

With reference to FIG. **26**, the content of an exemplary test report for the first static set of successive trials will be described. As shown in FIG. **26**, it can be seen that selected test parameters **702** may be displayed at the top of the screen image **700**. The test parameters **702** may include: (i) the direction of head rotation during dynamic portions of the DVA test (i.e., about the yaw axis **66** of FIG. **10**), (ii) the approximate distance (e.g., in feet) between the subject and the visual display device **104**, **204**, **304**, (iii) whether or not progressive or corrective lenses (i.e., glasses or contact lens) are worn by the subject, (iv) the optotype display time (e.g., as determined during the visual processing time test described hereinafter), and (v) the target head angular velocity range for the subject during dynamic portions of the DVA test (e.g., in degrees per second). As additionally shown in FIG. **26**, a graph **704** is also displayed in the upper central portion of the screen in order to visually illustrate the optotype size (i.e., in log MAR or relative log MAR) for each successive trial while the subject's head **30** remains stationary. That way, the operator or clinician is able to easily observe any trends that occurred during the testing (i.e., consistent incorrect answers, consistent correct answers, etc.) and to easily assess whether or not the testing results follow a normal trend (e.g., transient response-type curve as explained hereinafter). As shown in FIG. **26**, the y-axis **706** of the graph **704** is the optotype size (e.g., in log MAR or relative log MAR), while the x-axis **708** of the graph **704** is the trial number of the first set of successive trials (i.e., while the head **30** of the subject **18** remains stationary). In the graph **704** of FIG. **26**, it can be seen that, after the highly variable beginning of the test, the stimulus level curve **710** tends to oscillate above and below an optotype size of approximately 0.15 (i.e., most of the local maximum and minimum points of the curve **710** occur at log MAR values of 0.2 and 0.1, respectively). A horizontal line **711** is drawn at an optotype size of 0.15 log MAR in the graph **704** of FIG. **26** in order to graphically indicate the static acuity of the subject **18** to the clinician. Referring again to FIG. **26**, it can be seen that the test results data is provided in tabular form (i.e., table **712**) in the lower central portion of the test report **700**. The table **712** in FIG. **26** has a total of three (3) columns. The left column **714** of the table **712** lists the trial number (i.e., trials nos. 1 through 14), the middle column **716** of the table **712** lists the optotype size (i.e., in log MAR or relative log MAR), and the right column **718** of the table **712** lists whether or not the patient response was correct or incorrect for each of the trials in the table **712**. Advantageously, the table **712** allows the operator or clinician to quickly ascertain the subject's numerical results for the first static set of trials.

After determining the size parameter of the first threshold version of the optotype in step **410** above, and generating and displaying the quantitative results in steps **412** and **414**, the visual processing time of the subject **18** may be determined by the computing device **102**, **202**, **302** in steps **416**-**422** of FIGS. **11**A and **11**B. The purpose of this test is determine how long the optotype needs to be displayed on the screen of the visual display device **104**, **204**, **304** in order for the subject **18** to comprehend the displayed orientation of the optotype. Like the first set of successive trials described above, the visual processing time test is a static-type test, so there are no head movements made by the subject or patient during the performance of the visual processing time test. The size scale factor of the first threshold version of the optotype (e.g., in units of log MAR or relative log MAR) that was determined in conjunction with the first set of successive trials described above is used by the visual processing time test. In particular, the optotype size during the performance of the visual processing time test is determined by increasing the optotype size determined in conjunction with the first set of successive trials by two sizes (e.g., by 0.2 log MAR). This optotype size remains constant for all trials of the visual processing time test. The variable in the visual processing time test is the time duration during which the optotype is displayed on the screen. The stimulus level (i.e., selected display time of the optotype on the screen) may be determined by the computing device **102**, **202**, **302** using the same parameter estimation algorithm (e.g., Best-PEST algorithm) that selects the optotype size in the first set of successive trials described above and in the dynamic trials during the dynamic visual acuity (DVA) test described hereinafter. The same parameter estimation algorithm (e.g., Best-PEST algorithm) also may be used by the computing device **102**, **202**, **302** to determine the stimulus level (i.e., target head velocity) in the gaze stabilization test (GST) described hereinafter.

In one or more exemplary embodiments, during the visual processing time test, the shortest amount of time that the optotype is displayed on the screen of the visual display device **104**, **204**, **304** is twenty (20) milliseconds (i.e., because of the monitor refresh rate), while the maximum amount of time that the optotype is displayed on the screen of the visual display device **104**, **204**, **304** is seventy (70) milliseconds. The upper limit of seventy (70) milliseconds was selected because, if the subject or patient has a visual processing time greater than 70 milliseconds he or she will be unable to complete the dynamic trials of the dynamic visual acuity (DVA) test and gaze stabilization test (GST). An individual with a visual processing time greater than 70 milliseconds would be unable to complete these dynamic trials because the optotype must be displayed on the visual display device **104**, **204**, **304** while the head of the subject or patient is being displaced. If the display time of the optotype needed to be much longer than 70 milliseconds, it would not be possible to display the optotype only during the subject's

head movement, and conversely, to not display it when the subject's head is at maximum amplitude and head velocity is zero (0).

An exemplary operator or clinician screen image **628**, which may be displayed on the visual display device **104**, **204**, **304** during the performance of the visual processing time test when the subject **18** maintains the generally fixed position of his or her head **30**, is shown in FIG. **18**. In one or more embodiments, the computing device **102**, **202**, **302** may be specially programmed to generate the screen image **628** of FIG. **18** during the visual processing time (VPT) test. With reference to FIG. **18**, it can be seen that testing guidelines **630** may be displayed at the top of the screen image **628**. The testing guidelines may specify a suggested distance or distance range (e.g., approximately ten (10) feet or between eight (8) and sixteen (16) feet) for the placement of the subject **18**, visual display device height adjustment instructions, and additional instructions regarding the readiness of the subject. In one or more embodiments, the computing device **102**, **202**, **302** may be specially programmed to prompt the operator or clinician to input the step change (i.e., resolution) in the visual processing time between trials. The default test setting for the resolution may be ten (10) milliseconds, while the computing device **102**, **202**, **302** may be specially programmed to accept a resolution range between ten (10) milliseconds and fifty (50) milliseconds, inclusive. As additionally shown in FIG. **18**, a graph **632** is also displayed in the center of the screen in order to visually illustrate the visual processing time (e.g., in milliseconds) of the subject **18** for each successive trial while the subject's head **30** remains stationary. That way, the operator or clinician is able to easily view the subject's performance during the progression of the testing. As shown in FIG. **18**, the y-axis **638** of the graph **632** is the visual processing time (e.g., in milliseconds) of the subject **18**, while the x-axis **640** of the graph **632** is the trial number of the visual processing time test (i.e., while the head **30** of the subject **18** remains stationary). In the graph **632** of FIG. **18**, it can be seen that, after several abrupt fluctuations at beginning of the test, the stimulus level curve **639** tends to level out around thirty-five (35) milliseconds. Referring again to FIG. **18**, it can be seen that the small box **634** on the right center of the clinician screen image **628** is configured to display the subject's visual processing time (e.g., in milliseconds) during the current trial of the testing procedure. Advantageously, the display of the subject's visual processing time in the small box **634** allows the clinician to quickly ascertain the subject's current performance level during the execution of the test. In the screen image **628** of FIG. **18**, test summary data **636** is displayed below, and to the left of the graph **632** on the screen. For example, as shown in FIG. **18**, the test summary data **636** may include the visual processing time, optotype size in units of log MAR, the number of reversals, the number of trials, and the display time in milliseconds. In one or more embodiments, some values of the test summary data may be automatically completed as each of the test portions is successively completed (e.g., static visual acuity, visual processing time, dynamic visual acuity, and gaze stabilization).

After the operator or clinician enters a start command to the computing device **102**, **202**, **302** by depressing a particular key on the keyboard, the visual processing time test begins. Turning again to the flowchart of FIG. **11**A, it can be seen in step **416** that, while the subject **18** maintains a generally fixed position of his or her head **30** (i.e., keeping his or her head **30** as still as possible), one or more configurations of the visual object **10** are displayed on the output screen of the visual display device **104**, **204**, **304** for an initial display time (e.g., the optotype is displayed for ninety (90) milliseconds on the screen). For example, referring to FIG. **5**, one or more configurations **10***a*, **10***b*, **10***c*, **10***d* of the Landolt C optotype may be displayed one-at-time on the output screen of the visual display device **104**, **204**, **304** for an initial display time. In an alternative exemplary embodiment, with reference to FIG. **6**, one or more configurations **10'***a*, **10'***b*, **10'***c*, **10'***d* of the Tumbling E optotype may be displayed one-at-time on the output screen of the visual display device **104**, **204**, **304** for an initial display time. In other exemplary embodiments, other suitable optotypes may be used in place of the Landolt C or the Tumbling E, such as letters of a recognized alphabet (e.g., the English alphabet). In one or more embodiments, the visual object **10** (i.e., optotype) is displayed in approximately 500 milliseconds after the operator or clinician enters the start command to the computing device **102**, **202**, **302**. After the visual object (i.e., optotype) disappears from the output screen of the visual display device **104**, **204**, **304**, the computing device **102**, **202**, **302** may be specially programmed to implement a wait state, wherein the computing device **102**, **202**, **302** waits for the operator or clinician to record the subject's response.

During the visual processing time test, the same solid black circle **618** and crosshairs **620**, which was described above in conjunction with FIGS. **16** and **17**, is used to present the optotype to the subject **18**. That is, the patient screen during the visual processing time test is generally the same as the screen images **614**, **626** in FIGS. **16** and **17**.

Now, with reference to FIG. **11**B, in step **418**, the computing device or data processing device **102**, **202**, **302** determines whether or not the subject **18** correctly identifies the one or more configurations (e.g., **10'***a*, **10'***b*, **10'***c*, **10'***d*) of the visual object **10'** that is displayed on the visual display device **104**, **204**, **304** for the initial display time. For example, the subject **18** may be presented with a single optotype **10'***b* pointing down (see FIG. **6**). After the optotype is displayed to the subject **18**, the subject **18** or the clinician **14** may utilize a user input device **24** (e.g., a wireless mouse) in order to transmit the response of the subject **18** to the computing device **102**, **202**, **302** (e.g., the wireless mouse may have four buttons, each of which corresponds to one of the four configurations of the optotype). Alternatively, the response of the subject **18** may be entered using the keyboard of the computing device **102**, **202**, **302** by using the directional arrows and space bar on the keyboard. For example, the "up" arrow key on the keyboard is used to record an optotype pointing up, the "down" arrow key on the keyboard is used to record an optotype pointing down, the "left" arrow key on the keyboard is used to record an optotype pointing to the left, the "right" arrow key on the keyboard is used to record an optotype pointing to the right, and the spacebar is used to record an unknown orientation of the optotype. If the space bar is depressed on the keyboard, the computing device **102**, **202**, **302** randomly chooses the response of the subject **18**. After receiving the subject's response, the computing device **102**, **202**, **302** is specially programmed to determine if the subject correctly determined the configuration of the optotype that was displayed on the output screen of the visual display device **104**, **204**, **304**. For example, if the optotype **10'***b* of FIG. **6** was displayed on the screen, the subject **18** must indicate that optotype is pointing down to get the identification correct. Any other answer would be incorrect for this configuration of the optotype. Once the subject's answer or response is evaluated as to its correctness, the computing device **102**, **202**, **302** is specially programmed to record whether or not the subject **18** identified the optotype correctly. In one exemplary embodiment, if the subject **18** identifies the configuration of the optotype **10'***b* correctly, the computing device **102**, **202**,

302 is specially programmed to display one or more subsequent optotypes for a display time that is shorter than the initial display time (e.g., the second trial may display the subsequent optotype on the screen for a display time of only 50 milliseconds, rather than the 60 milliseconds that was used during the initial trial). Conversely, if the subject **18** identifies the configuration of the first optotype **10**'*b* incorrectly, the computing device **102**, **202**, **302** is specially programmed to display one or more subsequent optotypes for a display time that is longer than the initial display time (e.g., the second trial may display the subsequent optotype on the screen for a display time of 70 milliseconds, rather than the 60 milliseconds that was used during the initial trial). Also, in one or more embodiments, the computing device **102**, **202**, **302** is specially programmed to display the successive optotype on the screen approximately five-hundred (500) after it receives the subject's response regarding the preceding optotype.

In this manner, as specified in step **420** of FIG. **11**B, the computing device **102**, **202**, **302** is specially programmed to incrementally decrease or increase the display time for the visual object on the output screen of the visual display device **104**, **204**, **304** during a set of successive trials (e.g., during a maximum number **624** of fourteen (14) trials as indicated in FIGS. **16** and **17**). During the set of successive trials, various configurations of the same-sized visual object may be displayed on the output screen of the visual display device **104**, **204**, **304** for identification by the subject. For example, if the subject identifies a configuration of the same-sized optotype correctly, the screen display time for next-displayed optotype is generally decreased, while the screen display time for next-displayed optotype is generally increased if the subject fails to correctly identify the configuration of the optotype correctly. In the exemplary embodiment, after each optotype is displayed on the output screen of the visual display device **104**, **204**, **304** for a particular display time, the computing device **102**, **202**, **302** is specifically programmed to determine whether or not the subject **18** correctly identified the configuration of the optotype. In step **422** of FIG. **11**B, after the subject **18** has completed a predetermined number of trials of optotype identification, the computing device **102**, **202**, **302** is specifically programmed to determine a threshold visual processing time for the subject **18** based upon the performance of the subject **18** during the set of successive trials during which the subject **18** maintained the generally fixed position of his or her head **30**. For example, after a particular end condition is reached, the computing device **102**, **202**, **302** determines that the visual processing time for the subject **18** is fifty-five (55) milliseconds. In one embodiment, the visual processing time for the subject **18** is a calculated value that is determined using one or more statistical equations or formulas (e.g., using a Best-PEST algorithm as described hereinafter).

As described above for the first set of successive trials, the computing device **102**, **202**, **302** may be specifically programmed with multiple end conditions for determining when to end the second set of successive trials. For example, the computing device **102**, **202**, **302** may automatically stop the second set of successive trials as soon as any one or combination of the following conditions occur: (i) the subject has completed a total of fourteen (14) trials of optotype identification (i.e., a maximum allowable number of trials is reached), (ii) a predetermined number of reversals has occurred (refer to explanation above), or (iii) the user has stopped the first set of successive trials (e.g., the operator or clinician initiates the cessation of the successive trials by depressing a particular key on the keyboard).

Then, in step **424** of FIG. **11**B, the computing device **102**, **202**, **302** is specifically programmed to generate a quantitative assessment of the subject's performance during the visual processing time test, and finally, in step **426** of FIG. **11**B, to output the quantitative assessment of the subject's performance during the visual processing time test on the output screen of the visual display device **104**, **204**, **304**. For example, in an exemplary embodiment, the computing device **102**, **202**, **302** may generate a report **720**, such as that illustrated in FIG. **27**, in order to display the test results from the visual processing time test.

With reference to FIG. **27**, the content of an exemplary test report for the visual processing time test will be described. As shown in FIG. **27**, it can be seen that selected test parameters **722** may be displayed at the top of the screen image **720**. As described above for the test report **700**, the test parameters **722** may include: (i) the direction of head rotation during dynamic portions of the DVA test (i.e., about the yaw axis **66** of FIG. **10**), (ii) the approximate distance (e.g., in feet) between the subject and the visual display device **104**, **204**, **304**, (iii) whether or not progressive or corrective lenses (i.e., glasses or contact lens) are worn by the subject, (iv) the optotype size during the visual processing time test (e.g., in log MAR), (v) the optotype display time in milliseconds (e.g., as determined during the visual processing time (VPT) test) or display time range during the VPT test, and (vi) the target head angular velocity range for the subject during dynamic portions of the DVA test (e.g., in degrees per second). As additionally shown in FIG. **27**, a graph **724** is also displayed in the upper central portion of the screen in order to visually illustrate the visual processing time (e.g., in milliseconds) of the subject **18** for each successive trial while the subject's head **30** remains stationary. That way, the operator or clinician is able to easily observe any trends that occurred during the testing (i.e., consistent incorrect answers, consistent correct answers, etc.) and to easily assess whether or not the testing results follow a normal trend (e.g., transient response-type curve as explained hereinafter). As shown in FIG. **27**, the y-axis **726** of the graph **724** is the visual processing time (e.g., in milliseconds) of the subject **18**, while the x-axis **728** of the graph **724** is the trial number of the visual processing time test (i.e., while the head **30** of the subject **18** remains stationary). In the graph **724** of FIG. **27**, it can be seen that, after several abrupt fluctuations at beginning of the test, the stimulus level curve **730** tends to level out around forty (40) milliseconds. A horizontal line **731** is drawn at a visual processing time of 40 milliseconds in the graph **724** of FIG. **27** in order to graphically indicate the visual processing threshold time of the subject **18** to the clinician. Referring again to FIG. **27**, it can be seen that the test results data is provided in tabular form (i.e., table **732**) in the lower central portion of the test report **720**. Like the table **712** described above with regard to FIG. **26**, the table **732** in FIG. **27** has a total of three (3) columns. The left column **734** of the table **732** lists the trial number (i.e., trials nos. 1 through 12), the middle column **736** of the table **732** lists the display time (i.e., in milliseconds), and the right column **738** of the table **732** lists whether the patient response was correct or incorrect for each of the trials in the table **732**. Advantageously, the table **732** allows the operator or clinician to quickly ascertain the subject's numerical results for the second static set of successive trials performed in conjunction with visual processing time test.

Referring again to FIG. **11**B, the dynamic portion of the dynamic visual acuity test will be explained in detail. Initially, in step **428** of FIG. **11**B, while the subject **18** displaces his or her head **30** at a velocity or speed within a predetermined range (e.g., between 85 and 120 degrees per second) as measured by the motion sensing device **28**, one or more configurations of the optotype **10** having a third initial size are dis-

played on the output screen of the visual display device **104**, **204**, **304**. For example, as explained above for the series of tests when the subject's head remains stationary, different configurations of the Landolt C optotype may be displayed one-at-time on the output screen of the visual display device **104**, **204**, **304**. In one exemplary embodiment, the displacement of the subject's head **30** may comprise rotating the subject's to the right, and to the left, about the yaw axis **66** of FIG. **10** (i.e., approximately in a horizontal plane). The subject **18** may rotate his or head **30** on his or her own, or alternatively, the clinician **14** may rotate the subject's head **30** with his or her hands **32** so that it is easier to maintain the subject's head rotation within the predetermined range (see e.g., FIGS. **1** and **3**). In one embodiment, the optotype **10** is only displayed on the output screen of the visual display device **104**, **204**, **304** when the head **30** of the subject **18** is being rotated within the predetermined angular velocity range (e.g., between 85 and 120 degrees per second) for a requisite number of head sweeps. Initially, the subject **18** may be instructed to slowly begin moving his or her head **30** in the selected direction (i.e., left or right), and to gradually increase the rotational velocity until the grayscale color of the outer circle on the screen matches the grayscale color of the inner circle on the screen. In one or more embodiments, a Tumbling E optotype is displayed after the subject **18** gets the three (3) required head sweeps in a predetermined target velocity range (e.g., 85 deg./sec. to 120 deg./sec.). During the dynamic portion of the DVA test, the computing device **102**, **202**, **302** may be specially programmed to randomly choose the orientation of the optotype that is displayed on the screen. Also, during the dynamic portion of the DVA test, the computing device **102**, **202**, **302** may be specially programmed to randomly choose whether to display the optotype on a left head turn or a right head turn. In addition, the first visual indicators **50**, **51**, and **60** described above in conjunction with FIGS. **7-9** may be used to ensure that the subject's head **30** is rotated within the predetermined velocity range, while the second visual indicator **48** may be used to ensure that the subject's head **30** is rotated within the prescribed range of motion (e.g., between 20 degrees to the left and 20 degrees to the right, or between 30 degrees to the left and 30 degrees to the right). Alternatively, the visual indicators described hereinafter in conjunction with FIGS. **21-24** may be used to ensure that the subject's head **30** is rotated within the predetermined velocity range.

After the optotype disappears during the dynamic portion of the DVA test, the subject **18** continues to shake his or her head, but gives an orientation response to the operator or clinician identifying the orientation of the optotype that appeared on the screen. During the dynamic portion of the DVA test, the subject **18** is also permitted to stop rotating his or her head **30**, which results in the DVA test entering into a "pause" state. If the "pause" state is initiated, the computing device **102**, **202**, **302** is specially programmed to indicate a detected zero (0) head velocity at the bottom of the screen, and to further generate instructions on the screen that instruct the subject to resume rotating his or her head when ready. In one or more embodiments, approximately five-hundred (500) milliseconds after the operator or clinician records the orientation response of the subject **18**, the next trial of the DVA test begins, wherein another optotype is displayed after the subject **18** gets the three (3) required head sweeps in the predetermined target velocity range. If a trial of the DVA test lasts for more than eight (8) seconds, the computing device **102**, **202**, **302** may be specially programmed to interrupt the trial, and to mark the trial as "unable to complete".

In alternative exemplary embodiments, rather than rotating his or her head **30** about the yaw axis **66** in FIG. **10**, the subject **18** may alternatively rotate his or her head **30** about the pitch axis **62** (i.e., approximately in a vertical plane) or about the roll axis **64** (i.e., in a roll plane). The computing device **102**, **202**, **302** is specially programmed to allow the user to selectively choose any one of these rotational directions when performing the dynamic portion of the dynamic visual acuity (DVA) test. In one embodiment, when the rotation about the pitch axis **62** is selected the optotype **10** is only displayed on the output screen of the visual display device **104**, **204**, **304** when the head **30** of the subject **18** is being rotated within a predetermined angular velocity range (e.g., between 60 and 85 degrees per second).

In one or more embodiments, a baseline visual processing time and static visual acuity value must have been previously stored in the computing device **102**, **202**, **302** in order to permit the subject **18** to perform the dynamic portion of the dynamic visual acuity (DVA) test. For example, if no baseline visual processing time and static visual acuity was previously determined on the day of the DVA test, the subject **18** must first complete the static visual acuity testing and the visual processing time testing prior to performing the dynamic portion of the dynamic visual acuity (DVA) test.

In one or more embodiments, during the dynamic portion of the dynamic visual acuity (DVA) test, as well as during the performance of the gaze stabilization test (GST) that will be described hereinafter, and during the DVA and GST practice modes, the head velocity of the subject **18**, as measured by the motion sensing device **28**, is used by the computing device **102**, **202**, **302** in order to determine when to display the optotype so that the optotype will generally be shown at a position centered around the subject's zero position. The subject's zero position is set at the beginning of each trial when the subject **18** is generally still and looking straight ahead at the visual display device **104**, **204**, **304**. During the sweep in which the optotype (e.g., Landolt C optotype or Tumbling E optotype) will be shown, an optimal trigger angle is calculated by the computing device **102**, **202**, **302** at each sample based on the instantaneous angular velocity of the subject's head **30** and the length of time for which the optotype must be displayed. When the most recent angle calculated is reached, the optotype begins to show on the screen of the visual display device **104**, **204**, **304**. The optimal trigger angle may be calculated by the computing device **102**, **202**, **302** as follows:

$$\theta_T = \frac{\dot{\theta}[(t)(10^{-3})]}{2} \tag{7}$$

where:

$\dot{\theta}$: instantaneous head velocity in the IMU plane of testing in degrees per second; and

t: length of time in milliseconds (ms) that the optotype will be displayed on the screen. In the above equation (7), the optotype display time t may be calculated by adding thirty-five (35) milliseconds to the calculated visual processing speed (VPS) threshold time determined from the visual processing time test. The calculation described in equation (7) is iterated with each sample until the trigger angle θ_T is reached, in which case, the optotype is triggered to display. Because the subject's zero position is set when the subject **18** is generally still and looking straight ahead at the visual display device **104**, **204**, **304**, the trigger angle θ_T calculated in equation (7) is divided by two (2). In one or more embodiments, if the visual processing speed (VPS) threshold time determined

for the subject **18** is greater than forty (40) milliseconds, a high optotype display time is noted in the subject's report.

In one or more embodiments, the third initial size of the optotype **10** in the dynamic series of trials is larger than the first initial size of the optotype **10** in the first static series of trials. Because it is harder for a subject **18** to identify the optotype **10** during the dynamic series of trials when his or her head **30** is moving, as compared when his or her head is stationary in the first static set of trials, it makes sense to increase the size of the optotype **10** during the second set of trials so that it can be more easily identified by the subject **10**. For example, in one embodiment, the third initial size of the optotype **10**, **10'** in the dynamic series of trials may have a size scale factor of 1.0 (e.g., optotypes **10***a*, **10***b*, **10***c*, **10***d* in FIG. **5** or optotypes **10'***a*, **10'***b*, **10'***c*, **10'***d* in FIG. **6**), while the first initial size of the optotype **10**, **10'** in the first static series of trials may have a size scale factor of 0.75 (e.g., optotypes **10***e*, **10***f*, **10***g*, **10***h* in FIG. **5** or optotypes **10'***e*, **10'***f*, **10'***g*, **10'***h* in FIG. **6**).

An exemplary operator or clinician screen image **642**, which may be displayed on the visual display device **104**, **204**, **304** during the dynamic set of successive trials when the subject **18** rotates his or her head **30** within a predetermined angular velocity range, is shown in FIG. **19**. In one or more embodiments, the computing device **102**, **202**, **302** may be specially programmed to generate the screen image **642** of FIG. **19** during the performance of this latter dynamic portion of the vision testing. As shown in FIG. **19**, a set of on-screen virtual selection buttons **643***a*, **643***b*, **643***c* are provided at the top center of the screen for selecting one of: (i) a position practice mode (by clicking on button **643***a*), (ii) a velocity practice mode (by clicking on button **643***b*), and (iii) an actual DVA test mode (by clicking on button **643***c*). With reference again to FIG. **19**, it can be seen that testing guidelines **644** may be displayed at the top of the screen image **642**. The testing guidelines may specify a distance or distance range (e.g., approximately ten (10) feet or between eight (8) and sixteen (16) feet) for the placement of the subject **18**, visual display device height adjustment instructions, instructions regarding the readiness of the subject, and additional instructions regarding the practice modes (the practice modes of the dynamic visual acuity test will be described hereinafter). In one or more embodiments, the computing device **102**, **202**, **302** may be specially programmed to prompt the operator or clinician to input the distance between the forehead of the subject and the front of the visual display device screen (e.g., in feet from the front of the screen). The default test setting for the distance may be ten (10) feet, while the computing device **102**, **202**, **302** may be specially programmed to accept a range of distances between eight (8) and sixteen (16) feet, inclusive. As additionally shown in FIG. **19**, a graph **646** is also displayed in the center of the screen in order to visually illustrate the optotype size for each successive trial while the subject's head **30** is rotated to the left and right. That way, the operator or clinician is able to easily view the subject's performance during the progression of the testing. As shown in FIG. **19**, the y-axis **652** of the graph **646** is the optotype size (e.g., in relative log MAR or log MAR), while the x-axis **654** of the graph **646** is the trial number of the dynamic set of successive trials (i.e., while the head **30** of the subject **18** is rotated to the left and right). In the graph **646** of FIG. **19**, it can be seen that stimulus curves **651**, **653** are provided for both the right and left directions of head movement. Referring again to FIG. **19**, it can be seen that the small box **648** on the right center of the clinician screen image **642** is configured to display the optotype size (e.g., in log MAR or relative log MAR) during the current trial of the dynamic testing procedure. Advantageously, the display of the optotype size in the small box **648** allows the clinician to quickly ascertain the subject's current performance level during the execution of the test. In the screen image **642** of FIG. **19**, test summary data **650** is displayed below, and to the left of the graph **646** on the screen. For example, as shown in FIG. **19**, the test summary data **650** may include the baseline visual processing time (i.e., baseline PTT in milliseconds), the current DVA optotype size in units of log MAR for both left and right head rotation, and the relative optotype size for the static series of tests in units of realtive log MAR. In one or more embodiments, some values of the test summary data may be automatically completed as each of the test portions is successively completed (e.g., static visual acuity, visual processing time, dynamic visual acuity, and gaze stabilization).

The practice mode of the dynamic visual acuity (DVA) test will be described in conjunction with FIG. **20**. The practice mode walks subjects or patients through the required head movements for the DVA test. The first portion of the practice mode, namely position practice, focuses only on the head position of the subject or patient, allowing him or her to become familiar with the desired amplitude of head movement during the test. Referring to FIG. **20**, it can be seen that the computing device **102**, **202**, **302** may be specially programmed to generate the screen image **656** during the position practice portion of the practice mode. In FIG. **20**, it can be seen that practice guidelines **658** may be displayed at the top of the screen image **656**. The practice guidelines may specify instructions regarding the focus direction of the subject **18**, and additional instructions regarding the manner in which the practice exercise is to be performed by the subject **18**. As additionally shown in FIG. **20**, two rectangular boxes **660**, **662** are also displayed in the center of the screen in order to visually illustrate the amplitude of head displacement to the subject **18**. That way, the subject is able to easily determine if he or she is rotating his or her head using the proper amplitude. As shown in FIG. **20**, each of the rectangular boxes **660**, **662** is intersected by a respective vertical line **664**, **666**. The vertical lines **664**, **666** are used to indicate the proper amplitude of the head displacement for the subject **18** during the position practice. The rectangular box **660** and its intersecting amplitude line **664** correspond to the left directional rotation of the subject's head **30**, while the rectangular box **662** and its intersecting amplitude line **666** correspond to the right directional rotation of the subject's head **30**. In FIG. **20**, it can be seen that a displaceable indicator bar **668** is used to represent the rotational position of the subject's head **30**. The displaceable indicator bar **668** in FIG. **20** indicates that the subject **18** is displacing his or her head to the right. Alternatively, if the subject **18** were displacing his or her head to the left, a displaceable indicator bar, which is similar to the bar **668** of FIG. **20**, would appear within the rectangular box **660** on the left side of the screen image **656**. During the position practice, the subject **18** is instructed to displace the visual indicator bar **668** between each of the amplitude lines **664**, **666** (i.e., the subject **18** is instructed to displace the visual indicator bar **668** up to, but not past, each of the amplitude lines **664**, **666** in succession, as he or she rotates his or her head **30** to the left, and to the right). For example, if the subject **18** displaces his or her head **30** with the proper amplitude to the right, the visual indicator bar **668** would reach the amplitude line **666**, but not go past the amplitude line **666**. However, if the amplitude of the subject's head displacement to the right is too large, the visual indicator bar **668** would go past the amplitude line **666** (i.e., the right edge of the visual indicator bar **668** would be displaced to the right of the amplitude line **666** on the screen). Conversely, if the amplitude of the subject's head

displacement to the right is too small, the visual indicator bar **668** would not reach the amplitude line **666** (i.e., the right edge of the visual indicator bar **668** would lie to the left of the amplitude line **666** on the screen).

The second portion of the DVA practice mode, namely velocity practice, focuses on the head velocity of the patient. The second portion of the practice mode allows the patient to become familiar with the gray circle setup of the test, which will be explained hereinafter in conjunction with FIGS. **21-24**. That is, during velocity practice, the subject **18** is able to practice matching the color of the outer circle to the target gray of the inner circle. Initially, the subject **18** may be instructed to slowly begin moving his or her head **30** in the selected direction (i.e., left or right), and to gradually increase the rotational velocity until the grayscale color of the outer circle on the screen matches the grayscale color of the inner circle on the screen. In one or more embodiments, a Tumbling E optotype is displayed after the subject **18** gets the three (3) required head sweeps in a predetermined target velocity range (e.g., 85 deg./sec. to 120 deg./sec.). During the velocity practice, the Tumbling E optotype is of a large size, it is always in the upright direction (pointing right), and it is displayed for a few hundred milliseconds to allow the subject **18** to focus on head velocity. Alternatively, the computing device **102**, **202**, **302** may be specially programmed to randomly choose the orientation of the optotype during the practice mode. Also, during the velocity practice mode, the computing device **102**, **202**, **302** may be specially programmed to randomly choose whether to display the optotype on a left head turn or a right head turn. After the optotype disappears during the practice mode, the subject **18** continues to shake his or her head, but gives an orientation response to the operator or clinician identifying the orientation of the optotype that appeared on the screen. During the practice mode, the subject **18** is also permitted to stop rotating his or her head **30**, which results in the practice mode entering into a "pause" state. In one or more embodiments, approximately five-hundred (500) milliseconds after the operator or clinician records the orientation response of the subject **18**, the next trial of the practice mode begins, wherein another optotype is displayed after the subject **18** gets the three (3) required head sweeps in the predetermined target velocity range. The practice mode may be continued until the subject **18** clearly understands the task that is being performed during the testing. The computing device **102**, **202**, **302** may be specially programmed to stop the practice mode when either the subject **18** or the operator presses the "ESC" key on the keyboard of the computing device **102**, **202**, **302**.

With reference to FIGS. **21-24**, exemplary subject screen images **670**, **678**, **682**, **684** which may be displayed on the visual display device **104**, **204**, **304** and generated by the computing device **102**, **202**, **302** during the dynamic set of successive trials when the subject **18** rotates his or her head **30** within a predetermined angular velocity range, will now be described. Initially, referring to FIG. **21**, it can be seen that a set of instructions **672** for the subject or patient may be displayed at the top of the screen image **670**. The subject or patient instructions **672** may specify the manner in which the subject or patient is supposed to carry out the test (e.g., by instructing the patient to sit still and focus on the circle **618**, and by instructing the patient to indicate the orientation of the optotype after it disappears from the screen). The set of instructions **672** may be initially displayed on the output screen by the computing device **102**, **202**, **302**, and then subsequently hid from view (i.e., suppressed thereafter) so as not to unnecessarily distract the subject **18** during the testing. As additionally shown in FIG. **21**, a solid gray circle **618'** is displayed in the center of the screen. The circle **618'** is generally the same as the circle **618** described above in conjunction with FIG. **16**, except that it is gray in color rather than black. Like the circle **618** described above, the circle **618'** of FIG. **21** also comprises a plurality of crosshairs **620'** disposed therein, and extending inwardly towards the center of the circle **618'**. The crosshairs **620'** are generally the same as the crosshairs **620** described above in conjunction with FIG. **16**, except that they are gray in color rather than black. Referring again to FIG. **21**, it can be seen that, in the bottom right-hand corner of the screen, the number of trials **674** completed thus far, together with the maximum number of trials **676** that may be completed during the dynamic set of successive trials is displayed. Because FIG. **21** depicts the starting screen image **670** for the dynamic set of successive trials (i.e., when the subject's head is rotated to the left and to the right), the number **674** is zero (0) in FIG. **21**. In this illustrative embodiment, the maximum number of trials **676** performed in conjunction with the dynamic set of successive trials is twenty-eight (28). However, it is to be understood that, in other embodiments of the invention, the maximum number of trials **676** performed in conjunction with the dynamic set of successive trials may be higher or lower than twenty-eight (28). Also, in an alternative embodiment, the small box **648** with the optotype size described above in conjunction with FIG. **19** and the small box **692** with the target head velocity described below in conjunction with FIG. **25** may be placed in the bottom right-hand corner of the screens **670**, **678**, **682**, **684**, rather than the number of trials **674** completed thus far, and the maximum number of trials **676**. In this alternative embodiment, the number of trials **674** completed thus far, and the maximum number of trials **676** are placed in the test summary data **650**, **694** on the respective operator or clinician screens **642**, **686**.

Next, referring to FIG. **22**, it can be seen that the screen image **678** is generally the same as the screen image **670** of FIG. **21**, except that an outer white circle **680** is shown circumscribing the inner gray circle **618'**. In FIG. **22**, the outer white circle **680** is displayed on the visual display device **104**, **204**, **304** in order to indicate that the subject **18** is rotating his or her head at an angular velocity that exceeds the prescribed angular velocity range (i.e., the subject **18** is rotating his or her head **30** too fast). Conversely, the screen image **682** illustrated in FIG. **23** depicts a scenario wherein the subject **18** is rotating his or her head **30** at a velocity that is too slow. In FIG. **23**, it can be seen that the screen image **682** is generally the same as the screen images **670**, **678** of FIGS. **21** and **22**, except that an outer black circle **680'** is shown circumscribing the inner gray circle **618'**. In FIG. **23**, the outer black circle **680'** is displayed on the visual display device **104**, **204**, **304** in order to indicate that the subject **18** is rotating his or her head at an angular velocity that is lower than the prescribed angular velocity range (i.e., the subject **18** is rotating his or her head **30** too slow).

Turning to FIG. **24**, it can be seen that the screen image **684** is generally the same as the screen images **670**, **678**, **682** of FIGS. **21-23**, except that an optotype **10'** is displayed in the center of the circle **618'**, and the outer circle **680"** of FIG. **24** is the same gray color as the inner circle **618'**. While a Tumbling E optotype is utilized in the illustrative embodiment of FIG. **24**, it is to be understood that, in an alternative embodiment, a Landolt C optotype or another type of optotype may be used in place of the Tumbling E optotype. In the exemplary screen image **684** of FIG. **24**, it can be seen that the optotype is pointing up, so a correct identification of the optotype by the subject or patient would require that he or she indicates that the optotype is pointing up. As also depicted in FIG. **24**,

the number of trials **674** is equal to one (1) in order to indicate that the subject or patient has completed one trial of the dynamic set of successive trials (i.e., when the subject's head **30** is rotated to the left and to the right). In FIG. **24**, because the outer circle **680"** matches the same gray color as the inner circle **618'**, the subject **18** is rotating his or her head **30** within the prescribed angular velocity range for head movement during the test.

During the performance of the dynamic visual acuity (DVA) test, as well as during the performance of the gaze stabilization test (GST) that will be described hereinafter, the subject or patient needs information about their instantaneous head velocity while executing these tests. However, moving objects on the screen are visually distracting and increase the cognitive complexity of the test. In FIGS. **21-24**, the inner circle **618'** and crosshairs **620'** are set to a "target" shade of gray, which corresponds to the target head velocity for the trial. The outer circle **680**, **680'**, **680"** changes to different shades of gray based on the instantaneous head velocity of the subject **18**, with black being too slow and white being too fast. Therefore, the subject **18** must try to match the color of the outer circle **680**, **680'**, **680"** to the inner circle **618'**. Grayscale was chosen instead of using different colors (e.g., red and green) for the inner and outer circles **618'**, **680** to further reduce the cognitive complexity of the test. It also eliminates the difficulties that would occur for subjects or patients with colorblindness.

After the subject or patient gets three (3) head sweeps that match the target head velocity range, the optotype **10'** will appear in the center of the circle and crosshairs design (e.g., as shown in FIG. **24**). This overall setup keeps the patient's gaze on one part of the screen (i.e., the center of the screen). Advantageously, the patient does not need to look to different parts of the screen for feedback on his or her head velocity and for the optotype display, which minimizes the impact of the patient's cognitive ability on the test results.

In one or more embodiments, the subject or patient screen images **670**, **678**, **682**, **684** of FIGS. **21-24** may comprise a consistent background color throughout the testing (e.g., the background screen color may comprise a light blue color during all of the trials of the DVA test and the GST). However, in one or more alternative embodiments, the computing device **102**, **202**, **302** may be specially programmed to vary the contrast between the optotype (e.g., Tumbling E) displayed on the output screen of the visual display device **104**, **204**, **304** and the background of the output screen. For example, at the beginning of the varying contrast test, a black optotype may be displayed on a white or light blue background. However, during the performance of the test, the white or light blue background may be changed to a grey color or another color or grayscale that is closer to the color of the optotype itself. It is to be understood that, during the test, a plurality of different background colors or grayscale shades may be used in order to present the subject **18** with varying degrees of contrast between the optotype and the screen background. The contrast between the optotype and the screen background has a direct relationship to the subject's performance during the test. In one or more illustrative embodiments, the background color or shade of grayscale may be changed after the optotype is identified by the subject **18**. The abovedescribed varying contrast test may be provided as another, separate test that is conducted in conjunction with the other tests described herein (e.g., the varying contrast test may be used in conjunction with a test series that includes both the DVA test and the GST).

In one or more embodiments, during the performance of the dynamic visual acuity (DVA) test and its practice modes, as well as during the performance of the gaze stabilization test (GST) and its practice modes that will be described hereinafter, the computing device **102**, **202**, **302** is specially programmed to generate an audio output signal that corresponds to the proper head sweeping of the subject **18**, and to output that audio output signal to the speakers of the computing device **102** in order to assist the subject **18** with the proper head sweep timing that is required for the DVA and GST tests (i.e., a metronome plays from the speakers to assist the subject **18** with the execution of the head sweep timing). During the GST test, the metronome changes the beats per minute with each trial, based on the target head velocity of that trial. The metronome provides an audible indicator of the pace at which the subject's head should be rotated during the DVA and GST tests. As such, the metronome supplements the visual indicators (i.e., the change in the grayscale coloration of the outer circle **680**, **680'**, **680"** that was described above in conjunction with FIGS. **21-24**) that is provided on the screen of the visual display device **104**, **204**, **304**. The exact timing of the metronome will vary based upon the particular subject or patient being tested.

Referring again to the flowchart of FIG. **11**B, the computing device or data processing device **102**, **202**, **302** determines whether or not the subject **18** correctly identifies one or more configurations (e.g., **10'***a*, **10'***b*, **10'***c*, **10'***d*) of the visual object **10'** having the third initial size in step **430**. For example, as described above with regard to the first static series of trials, the subject **18** may be presented with one or more optotypes having the third initial size (e.g. a single optotype **10'***a* pointing up). This optotype **10'***a* is of the third initial size, which may be a size scale factor of 1.0. After the optotype is displayed to the subject **18**, the subject **18** or the clinician **14** may utilize a user input device **24** (e.g., a wireless mouse) in order to transmit the response of the subject **18** to the computing device **102**, **202**, **302** (e.g., the wireless mouse may have four buttons, each of which corresponds to one of the four configurations of the optotype). After receiving each of the subject's responses, the computing device **102**, **202**, **302** is specially programmed to determine if the subject correctly determined the configuration of the optotype that was displayed on the output screen of the visual display device **104**, **204**, **304**. For example, if the optotype **10'***a* of FIG. **6** was displayed on the screen, the subject **18** must indicate that optotype is pointing up to get the identification correct. Any other answer would be incorrect for this configuration of the optotype. Once the subject's answer or response is evaluated as to its correctness, the computing device **102**, **202**, **302** is specially programmed to record whether or not the subject **18** identified the optotype correctly. As explained above with regard to the first static series of trials, in one exemplary embodiment, if the subject **18** identifies the configuration of the optotype **10'***a* correctly, the computing device **102**, **202**, **302** is specially programmed to display one or more optotypes having a physical size that is smaller than the first optotype (e.g., the second trial may comprise one or more optotypes that have a size scale factor of 0.75). For example, the second optotype may comprise the optotype **10'***h* in FIG. **6**, which has a smaller size than the optotype **10'***a* in the top row of FIG. **6**. Conversely, if the subject **18** identifies the configuration of the first optotype **10'***a* incorrectly, the computing device **102**, **202**, **302** is specially programmed to display one or more optotypes having a physical size that is larger than the first optotype (e.g., the second optotypes may have a size scale factor of 1.25).

In this manner, as set forth in step **432** of FIG. **11**B, the computing device **102**, **202**, **302** is specially programmed to incrementally decrease or increase the size of the visual

object (i.e., the optotype) on the output screen of the visual display device **104**, **204**, **304** during a third set of successive trials while the subject **18** displaces his or her head at a velocity or speed within the predetermined range as measured by the motion sensing device **28** (e.g., during a maximum number **676** of twenty-eight (28) trials as indicated in FIGS. **21-24**). For example, if the subject identifies the configuration of a particular-sized optotype correctly, the optotype size of the next optotype displayed on the screen is generally decreased, while the optotype size of the next optotype displayed on the screen is generally increased if the subject fails to correctly identify the configuration of the optotype correctly. In the exemplary embodiment, after each optotype is displayed on the output screen of the visual display device **104**, **204**, **304**, the computing device **102**, **202**, **302** is specifically programmed to determine whether or not the subject **18** correctly identified the configuration of the optotype.

In step **434** of FIG. **12**, after the subject **18** has completed a predetermined number of trials of optotype identification, the computing device **102**, **202**, **302** is specifically programmed to determine a size parameter (e.g., a size scale factor) of a second threshold version of the optotype based upon the performance of the subject **18** during the third set of successive trials during which the subject **18** displaces his or her head **30**. For example, after the subject completes a series of twenty-eight (28) trials of optotype identification, the computing device **102**, **202**, **302** determines that the second threshold version of the optotype has a size scale factor of 0.60.

In one or more embodiments, during the third set of successive trials during which the head **30** of the subject **18** is displaced, a second threshold version of the optotype is determined by the computing device **102**, **202**, **302** for both the right and left directions of head movement about the yaw axis **66** of the FIG. **10**. That is, a second threshold version of the optotype is determined for the left rotation of the subject's head **30** about the yaw axis **66**, and another second threshold version of the optotype is determined for the right rotation of the subject's head **30** about the yaw axis **66**. For example, the second threshold version of the optotype for left rotation of the subject's head **30** may have a size scale factor of 0.60, while the second threshold version of the optotype for right rotation of the subject's head **30** may have a size scale factor of 0.80.

Next, in step **436** of FIG. **12**, the computing device **102**, **202**, **302** is specifically programmed to compare the size parameter of the second threshold version of the visual object (i.e., the optotype) to the size parameter of the first threshold version of the visual object. In the illustrated embodiment, the computing device **102**, **202**, **302** compares the second threshold version of the optotype determined for both the right and left directions of head movement of the subject **18** to the size parameter of the first threshold version of the visual object. Then, in step **438** of FIG. **12**, the computing device **102**, **202**, **302** is specifically programmed to generate a quantitative assessment of dynamic visual acuity loss using the size parameters of the first and second threshold versions of the visual object and finally, in step **440** of FIG. **12**, to output the quantitative assessment of dynamic visual acuity loss of the subject **18** on the output screen of the visual display device **104**, **204**, **304**. For example, in an exemplary embodiment, the computing device **102**, **202**, **302** may generate a report **740***a*, **740***b*, such as that illustrated in FIGS. **28**A and **28**B, in order to display the test results from the third dynamic set of successive trials. The dynamic visual acuity (DVA) testing procedure concludes at step **442** in FIG. **12**.

With reference to FIGS. **28**A and **28**B, the content of an exemplary test report for the third dynamic set of successive trials will be described. As shown in FIG. **28**A, it can be seen that selected test parameters **742** may be displayed at the top of the screen image **740***a*. The test parameters **742** may include: (i) the direction of head rotation during dynamic portions of the DVA test (i.e., about the yaw axis **66** of FIG. **10**), (ii) the approximate distance (e.g., in feet) between the subject and the visual display device **104**, **204**, **304**, (iii) whether or not progressive or corrective lenses (i.e., glasses or contact lens) are worn by the subject, (iv) the optotype size range presented during the DVA test, (v) the optotype display time (e.g., as determined during the visual processing time test described above), and (vi) the target head angular velocity range for the subject during dynamic portions of the DVA test (e.g., in degrees per second). As additionally shown in FIG. **28**A, a bar graph **744** is also displayed in the upper central portion of the screen in order to compare the optotype size parameters determined for the dynamic testing of the subject **18** to the optotype size parameter determined for the static testing of the subject **18**. As shown in FIG. **28**A, the y-axis **746** of the bar graph **744** is the optotype size (e.g., in log MAR or relative log MAR). The left bar **748** in the bar graph **744** corresponds to the size parameter that was determined for the second threshold version of the visual object (i.e., optotype) for a left rotational movement of the subject's head **30**, namely 0.25 log MAR. The center bar **750** in the bar graph **744** corresponds to the size parameter that was determined for the first threshold version of the visual object (i.e., optotype) during the first static set of successive trials, namely 0.15 log MAR. The right bar **752** in the bar graph **744** corresponds to the size parameter that was determined for the second threshold version of the visual object (i.e., optotype) for a right rotational movement of the subject's head **30**, namely 0.2 log MAR. The gray-colored horizontal band **754** that is superimposed on the bar graph **744** of FIG. **28**A represents two lines of vision loss on the Snellen chart so that any abnormalities can be readily ascertained. A normal individual typically has no more than two lines of vision loss when the dynamic vision testing results of that individual are compared to the static testing results of that individual. As such, in FIG. **28**A, the bottom edge of the gray-colored horizontal band **754** is aligned with the top edge of the static vision test bar **750** in order to clearly denote the "normal" range of values for the optotype size parameters determined during the dynamic portion of the vision testing. Thus, for the test results displayed in FIG. **28**A, it can be seen that the subject's size parameters for both left and right head rotation (i.e., 0.25 log MAR and 0.20 log MAR, respectively) both lie within the normal range that is indicated by the gray-colored horizontal band **754**. That is, the subject **18** who achieved the results displayed in FIG. **28**A had less than two lines of vision loss for her dynamic vision testing results as compared to her static testing results. Consequently, the subject **18** who achieved the results displayed in FIG. **28**A has normal or better than normal dynamic visual acuity as compared to the baseline population.

Referring again to FIG. **28**A, it can be seen that the test results data is provided in tabular form (i.e., table **756**) in the lower central portion of the test report **740***a*. The table **756** in FIG. **28**A has a total of three (3) rows. The first row **758** of the table **756** lists the optotype size parameter (i.e., in log MAR) for DVA left head rotation, no head rotation (static baseline condition), and for DVA right head rotation. The second row **760** of the table **756** lists the average achieved head velocity (i.e., in degrees per second) for DVA left head rotation and for DVA right head rotation. The third row **762** of the table **756**

lists the lines lost (i.e., in the Snellen chart) for DVA left head rotation and for DVA right head rotation.

Now turning to FIG. **28**B, it can be seen that a graph **764** may be displayed in the top half of the screen image **740***b*, while a table **774** with the DVA test results in tabular form may be displayed in the bottom half of the screen image **740***b*. The graph **764** displayed in the top half of the screen image visually illustrates the optotype size (i.e., in log MAR or relative log MAR) for each successive trial while the subject's head **30** is rotated to the left and to the right. That way, the operator or clinician is able to easily observe any trends that occurred during the testing (i.e., consistent incorrect answers, consistent correct answers, etc.) and to easily assess whether or not the testing results follow a normal trend (e.g., transient response-type curve as explained hereinafter). As shown in FIG. **28**B, the y-axis **766** of the graph **764** is the optotype size (e.g., in log MAR or relative log MAR), while the x-axis **768** of the graph **764** is the trial number of the dynamic set of successive of trials while the subject's head **30** is rotated to the left and to the right. In FIG. **28**B, it can be seen that two curves **770**, **772** are plotted on the graph **764**. The first curve **770** is a plot of the test results for the left rotation of the head **30** of the subject **18**, while the second curve **772** is a plot of the test results for the right rotation of the head **30** of the subject **18**. At the beginning of the test, it can be seen that the two curves **770**, **772** coincide with another (i.e., up to the fifth trial). However, after the fifth trial for both left and right head movement of the subject **18**, the curves **770**, **772** begin to deviate from one another (i.e., the tested optotype size is generally greater for the left head rotation between the fifth trial and thirteenth trial as compared to that tested for right head rotation). At the end of the dynamic set of successive trials, the curves **770**, **772** generally coincide with one another in the same manner that they did at the beginning of the DVA test.

Next, with reference again to FIG. **28**B, it can be seen that the test data, which is plotted in graph **764**, is presented in tabular form (i.e., table **774**) in the bottom half of the screen image **740***b*. The table **774** in FIG. **28**B generally comprises a set of five (5) columns **776***a*, **778***a*, **780***a*, **782***a*, **784***a* on the left-hand side thereof, and another set of five (5) columns **776***b*, **778***b*, **780***b*, **782***b*, **784***b* on the right-hand side thereof. The five (5) columns **776***a*, **778***a*, **780***a*, **782***a*, **784***a* on the left-hand side correspond to the test results for the left rotation of the subject's head **30**, while the five (5) columns **776***b*, **778***b*, **780***b*, **782***b*, **784***b* on the right-hand side correspond to the test results for the right rotation of the subject's head **30**. The leftmost column **776***a* of the table **774** lists the trial number (i.e., trials nos. 1 through 14) for left head rotation, the next column **778***a* to the right lists the optotype size (i.e., in log MAR or relative log MAR) for left head rotation, the next column **780***a* to the right lists the angular velocity achieved during the left head rotation trial, the next column **782***a* to the right lists the percentage of the velocity that was in the plane of movement (i.e., about the yaw axis **66**) for left head rotation, and the final column **784***a* corresponding to left head rotation lists whether or not the subject or patient response was correct or incorrect for each of the left rotation trials in the table **774**. Similarly, the leftmost column **776***b* corresponding to right head rotation in the table **774** lists the trial number (i.e., trials nos. 1 through 13) for right head rotation, the next column **778***b* to the right lists the optotype size (i.e., in log MAR or relative log MAR) for right head rotation, the next column **780***b* to the right lists the angular velocity achieved during the right head rotation trial, the next column **782***b* to the right lists the percentage of the velocity that was in the plane of movement (i.e., about the yaw axis **66**) for right head rotation, and the rightmost column **784***b* of the table **774** lists whether or not the subject or patient response was correct or incorrect for each of the right rotation trials in the table **774**. Advantageously, the table **774** allows the operator or clinician to quickly ascertain the subject's numerical results for the dynamic set of trials performed during the DVA test.

In an alternative embodiment, prior to the step **438**, wherein the computing device **102**, **202**, **302** generates a quantitative assessment of dynamic visual acuity loss using the size parameters of the first and second threshold versions of the visual object, the computing device **102**, **202**, **302** is further specifically programmed to determine a ratio of the size parameter of the second threshold version of the visual object (i.e., the optotype) to the size parameter of the first threshold version of the visual object. For example, the ratio R_{SP} of the size parameter of the second threshold version of the optotype to the size parameter of the first threshold version of the optotype may be expressed by the following equation:

$$R_{SP} = \frac{SF_2}{SF_1} \tag{8}$$

where:

SF_1: size parameter or scale factor of the first threshold version of the optotype; and

SF_2: size parameter or scale factor of the second threshold version of the optotype.

In these one or more alternative embodiments, the computing device **102**, **202**, **302** determines the ratio R_{SP} of the size parameter for both the right and left directions of head movement of the subject **18**. After the ratio of the size parameters between the first and second threshold versions of the visual object or optotype are determined, the computing device **102**, **202**, **302** further computes the base 10 logarithm of the ratio as follows to determine the dynamic visual acuity (DVA) loss using the following equation:

$$DVA_{loss} = \log_{10}(R_{SP}) \tag{9}$$

In these one or more alternative embodiments, the computing device **102**, **202**, **302** determines the dynamic visual acuity loss DVA_{loss} for both the right and left directions of head movement of the subject **18**.

In these one or more alternative embodiments, after the computing device **102**, **202**, **302** performs the calculations described above, the computing device **102**, **202**, **302** performs step **438** of FIG. **12**, wherein the quantitative assessment of dynamic visual acuity loss DVA_{loss} is generated thereby. In these one or more alternative embodiments, the quantitative assessment of dynamic visual acuity loss DVA_{loss} generated by the computing device **102**, **202**, **302** is based upon the computed ratio of the size parameters of the first and second threshold versions of the visual object. Then, the process proceeds with step **440** of FIG. **12**, wherein the computing device **102**, **202**, **302** outputs the quantitative assessment of dynamic visual acuity loss of the subject **18** on the output screen of the visual display device **104**, **204**, **304**. For example, in these one or more alternative embodiments, the computing device **102**, **202**, **302** may generate a graph or chart that graphically depicts the computed dynamic visual acuity loss DVA_{loss} value or values. In the alternative embodiments wherein the dynamic visual acuity loss DVA_{loss} is determined for both the right and left directions of head movement of the subject **18**, the graph or chart may graphi-

cally depicts the computed dynamic visual acuity loss for both the right and left movement directions. Advantageously, the graph or chart generated by the computing device **102**, **202**, **302** allows the clinician **14** to easily assess the amount of visual acuity loss that is realized when the subject **18** is moving his or her head **30**, as compared to when the subject's head **30** is stationary. The computing device **102**, **202**, **302** may additionally generate another graph or chart that displays the dynamic visual acuity loss symmetry for the left and right directions of movement in terms of a percentage difference between the right and left directions of movement. For example, the percentage difference between the right and left directions of movement may be computed using the following equation:

$$\%_{Difference} = \left(\frac{DVA_{loss\_L} - DVA_{loss\_R}}{DVA_{loss\_L} + DVA_{loss\_R}} \right) \quad (10)$$

where:

DVA_{loss_L}: dynamic visual acuity loss for the left direction of head movement; and

DVA_{loss_R}: dynamic visual acuity loss for the right direction of head movement.

Then, after computing the percentage difference between the right and left directions of movement, the computing device **102**, **202**, **302** is specially programmed to output the graph or chart that graphically displays the percentage difference between the right and left directions of movement on the output screen of the visual display device **104**, **204**, **304**. In these one or more alternative embodiments, the dynamic visual acuity (DVA) testing procedure concludes at step **442** in FIG. **12**.

In one or more embodiments, the size parameters of the first and second threshold versions of the visual object (e.g., the optotype **10**) do not comprise a Snellen fraction. Because a Snellen fraction is not used for these size parameters, the subject **18** is capable of being tested using the vision testing systems **100**, **200**, **300** without the determination of the exact distance between the subject **18** and the visual display device **104**, **204**, **304**. In these one or more embodiments, neither a Snellen fraction nor a distance between the subject **18** and the visual display device **104**, **204**, **304** is determined in carrying out the steps of the dynamic visual acuity (DVA) testing procedure and the gaze stabilization testing procedure. Advantageously, in these one or more embodiments, the dynamic visual acuity (DVA) testing procedure and the gaze stabilization testing procedure are capable of being flexibly performed in a plurality of different site locations without a need to determine the distance between the subject **18** and the visual display device **104**, **204**, **304**.

Advantageously, in these one or more embodiments, the exact distance between the subject or patient and the visual display device **104**, **204**, **304** does not need to be measured in order to run the test. That is, as long as the distance between the subject or patient and the visual display device **104**, **204**, **304** is approximated within plus or minus 25% of ten (10) feet, the exact distance need not be measured. Rather, the computing device **102**, **202**, **302** of the vision testing system **100** is specially programmed to utilize one, non-changing set of optotypes for all tests, regardless of the distance within the range of plus or minus 25% of ten (10) feet. In these one or more embodiments, this set of optotypes are the log MAR scale for ten (10) feet, but this distance does not matter because the difference between sizes (the ratio of the letters) is on the log MAR scale.

In these one or more embodiments, the exact distance between the subject or patient and the visual display device **104**, **204**, **304** does not need to be measured, and there is no need to change the size of the optotype based upon the distance, because the test carried out by the vision testing system **100**, **200**, **300** is only interested in the ratio of the letters. As illustrated in one or more of the exemplary screenshots depicted in the figures (e.g., in FIG. **19**), a "relative log MAR" scale may be used to label all of the optotype sizes in order to emphasize the true log MAR difference between letter sizes, but to acknowledge that the absolute value is not absolute log MAR (i.e., when the distance between the subject **18** and the screen is not determined before the testing). Conversely, when the distance between the subject **18** and the screen is determined or measured before the testing, then the optotype size listed in the screenshots is denoted using a "log MAR" scale, rather than a "relative log MAR" scale, in order to signify that the actual visual acuity value is listed for the subject (e.g., during the static series of trials during the testing, a value denoted using a "log MAR" scale indicates that the actual static visual acuity of the subject is listed). As such, when the distance between the subject **18** and the screen is measured before the testing and the "log MAR" scale is used, the set of optotype sizes that are used during the testing are automatically adjusted by the specially-programmed computing device **102**, **202**, **302** in accordance with the measured distance (e.g., if the measured distance is eight (8) feet, a smaller set of optotypes are used as compared to those used for a measured distance of twelve (12) feet). That is, the greater the distance between the subject **18** and the screen, the larger the size of the optotypes that are used during the testing so as to account for the increased distance.

As one example of the manner in which relative log MAR values are used, suppose that a subject or patient is sitting at a distance of nine (9) feet from the output screen of the visual display device **104**, **204**, **304**. The size parameter of the first threshold version of the visual display object during the first static series of trials (i.e., the threshold optotype during the SVA test) is 0.2 relative log MAR. The size parameter of the second threshold version of the visual display object during the third dynamic series of trials for both left and right rotation (i.e., the threshold optotype for both DVA left and right) is 0.5 relative log MAR. Thus, for both directions of head sweep, the subject or patient lost three (3) lines on the Snellen chart (or 0.3 log MAR of visual acuity).

As another example of the manner in which relative log MAR values are used, suppose that a subject or patient is sitting at a distance of five (5) feet from the output screen of the visual display device **104**, **204**, **304**. The size parameter of the first threshold version of the visual display object during the first static series of trials (i.e., the threshold optotype during the SVA test) is −0.2 relative log MAR. The size parameter of the second threshold version of the visual display object during the third dynamic series of trials for both left and right rotation (i.e., the threshold optotype for both DVA left and right) is −0.1 relative log MAR. Thus, for both directions of head sweep, the subject or patient lost only one (1) line on the Snellen chart (or 0.1 log MAR of visual acuity).

3. Gaze Stabilization Testing Procedure

In accordance with an illustrative embodiment of the invention, a flowchart illustrating a procedure for testing the gaze stabilization of a subject carried out by the vision testing system **100**, **200**, **300** is set forth in FIGS. **13**A, **13**B, and **14**. Referring initially to FIG. **13**A, the procedure commences at **500**, and in step **502**, the subject is positioned in front of the output screen of the visual display device **104**, **204**, **304** such that a visual object **10** (e.g., an optotype) is visible to the

subject **18**. Then, while the subject **18** maintains a generally fixed position of his or her head **30** (i.e., keeping his or her head **30** as still as possible), one or more configurations of the visual object **10** having a first initial size are displayed on the output screen of the visual display device **104**, **204**, **304** in step **504** of FIG. **13**A. As explained above with regard to dynamic visual acuity testing procedure, different configurations **10***e*, **10***f*, **10***g*, **10***h* of the Landolt C optotype may be displayed one-at-time on the output screen of the visual display device **104**, **204**, **304** (refer to FIG. **5**). In an alternative exemplary embodiment, with reference to FIG. **6**, different configurations **10'***e*, **10'***f*, **10'***g*, **10'***h* of the Tumbling E optotype may be displayed one-at-time on the output screen of the visual display device **104**, **204**, **304**. In other exemplary embodiments, other suitable optotypes may be used in place of the Landolt C or the Tumbling E, such as letters of a recognized alphabet (e.g., the English alphabet).

During the first successive set of trials when the subject **18** maintains the generally fixed position of his or her head **30**, the same exemplary operator screen image **600** of FIG. **15** and the same exemplary subject screen images **614**, **626** of FIGS. **16** and **17**, which were described above in conjunction with the dynamic visual acuity (DVA) test, may be used in conjunction with the first static set of successive set of trials during the gaze stabilization test (GST).

Now, turning again to FIG. **13**A, in step **506** of FIG. **13**A, the computing device or data processing device **102**, **202**, **302** determines whether or not the subject **18** correctly identifies one or more configurations (e.g., **10'***e*, **10'***f*, **10'***g*, **10'***h*) of the visual object **10** having the first initial size. For example, the subject **18** may be presented with one or more optotypes having the first initial size (e.g., a single optotype **10'***g* pointing down). This optotype **10'***g* is of the first initial size, which may be a size scale factor of 0.75. After the optotype is displayed to the subject **18**, the subject **18** or the clinician **14** may utilize a user input device **24** (e.g., a wireless mouse) in order to transmit the response of the subject **18** to the computing device **102**, **202**, **302** (e.g., the wireless mouse may have four buttons, each of which corresponds to one of the four configurations of the optotype). After receiving the subject's responses, the computing device **102**, **202**, **302** is specially programmed to determine if the subject correctly determined the configuration of the optotype that was displayed on the output screen of the visual display device **104**, **204**, **304**. For example, if the optotype **10'***g* of FIG. **6** was displayed on the screen, the subject **18** must indicate that optotype is pointing down to get the identification correct. Any other answer would be incorrect for this configuration of the optotype. Once the subject's answer or response is evaluated as to its correctness, the computing device **102**, **202**, **302** is specially programmed to record whether or not the subject **18** identified the optotype correctly. In one exemplary embodiment, if the subject **18** identifies the configuration of the optotype **10'***g* correctly, the computing device **102**, **202**, **302** is specially programmed to display one or more optotypes having a physical size that is smaller than the first optotype (e.g., the second trial may comprise one or more optotypes that have a size scale factor of 0.6875). For example, the second optotype may comprise the optotype **10'***j* in FIG. **6**, which has a smaller size than the optotype **10'***g* in the middle row of FIG. **6**. Conversely, if the subject **18** identifies the configuration of the first optotype **10'***g* incorrectly, the computing device **102**, **202**, **302** is specially programmed to display one or more optotypes having a physical size that is larger than the first optotype (e.g., the second optotype may have a size scale factor of 1.0). For example, in this case, the second optotype may comprise the optotype **10'***c* in the top row of FIG. **6**, which has a larger size than the optotype **10'***g*, in the middle row of FIG. **6**.

In this manner, as specified in step **508** of FIG. **13**A, the computing device **102**, **202**, **302** is specially programmed to incrementally decrease or increase the size of the visual object on the output screen of the visual display device **104**, **204**, **304** during a first set of successive trials (e.g., during a maximum number **624** of fourteen (14) trials as indicated in FIGS. **16** and **17**). For example, if the subject identifies the configuration of a particular-sized optotype correctly, the optotype size of the next optotype displayed on the screen is generally decreased, while the optotype size of the next optotype displayed on the screen is generally increased if the subject fails to correctly identify the configuration of the optotype correctly. In the illustrative embodiment, after each optotype is displayed on the output screen of the visual display device **104**, **204**, **304**, the computing device **102**, **202**, **302** is specifically programmed to determine whether or not the subject **18** correctly identified the configuration of the optotype.

In step **510** of FIG. **13**A, after the subject **18** has completed a predetermined number of trials of optotype identification, the computing device **102**, **202**, **302** is specifically programmed to determine a size parameter (e.g., a size scale factor) of a threshold version of the optotype based upon the performance of the subject **18** during the first set of successive trials during which the subject **18** maintained the generally fixed position of his or her head **30**. For example, after the subject completes a series of fourteen (14) trials of optotype identification, the computing device **102**, **202**, **302** determines that the threshold version of the optotype has a size scale factor of 0.40. In one embodiment, the size scale factor of the first threshold version of the optotype is a calculated value that is determined using one or more statistical equations or formulas (e.g., using a Best-PEST algorithm as described hereinafter).

Then, in step **512** of FIG. **13**A, the computing device **102**, **202**, **302** is specifically programmed to generate a quantitative assessment of the subject's performance during the first set of successive trials, and finally, in step **514** of FIG. **13**A, to output the quantitative assessment of the subject's performance during the first set of successive trials on the output screen of the visual display device **104**, **204**, **304**. For example, in an exemplary embodiment, the computing device **102**, **202**, **302** may generate a report **700**, such as that explained above with regard to FIG. **26**, in order to display the test results from the first set of successive trials.

After determining the size parameter of the first threshold version of the optotype in step **510** above, and generating and displaying the quantitative results in steps **512** and **514**, the visual processing time of the subject **18** may be determined by the computing device **102**, **202**, **302** in steps **516**-**522** of FIGS. **13**A and **13**B. Because the purpose of determining visual processing time and the details regarding its determination were described above in conjunction with the steps of the dynamic visual acuity (DVA) procedure, these details of the visual processing time test need not be reiterated here. During the gaze stabilization procedure, the steps associated with the determination of the subject's processing time are performed in the same manner as explained above with regard to the dynamic visual acuity (DVA) test.

During the second successive set of trials when the visual processing time of the subject **18** is determined, the same exemplary operator screen image **628** of FIG. **18**, and the same exemplary subject screen images **614**, **626** of FIGS. **16** and **17**, which were described above in conjunction with the

dynamic visual acuity (DVA) test, may be used in conjunction with the second static set of successive set of trials during the gaze stabilization test (GST).

Turning again to the flowchart of FIG. **13**A, it can be seen in step **516** that, while the subject **18** maintains a generally fixed position of his or her head **30** (i.e., keeping his or her head **30** as still as possible), one or more configurations of the visual object **10** are displayed on the output screen of the visual display device **104**, **204**, **304** for an initial display time (e.g., the optotype is displayed for sixty (60) milliseconds on the screen). For example, referring to FIG. **5**, one or more configurations **10***a*, **10***b*, **10***c*, **10***d* of the Landolt C optotype may be displayed one-at-time on the output screen of the visual display device **104**, **204**, **304** for an initial display time. In an alternative exemplary embodiment, with reference to FIG. **6**, one or more configurations **10'***a*, **10'***b*, **10'***c*, **10'***d* of the Tumbling E optotype may be displayed one-at-time on the output screen of the visual display device **104**, **204**, **304** for an initial display time. In other exemplary embodiments, other suitable optotypes may be used in place of the Landolt C or the Tumbling E, such as letters of a recognized alphabet (e.g., the English alphabet).

Now, with reference to FIG. **13**B, in step **518**, the computing device or data processing device **102**, **202**, **302** determines whether or not the subject **18** correctly identifies the one or more configurations (e.g., **10'***a*, **10'***b*, **10'***c*, **10'***d*) of the visual object **10'** that is displayed on the visual display device **104**, **204**, **304** for the initial display time. For example, the subject **18** may be presented with a single optotype **10'***b* pointing down (see FIG. **6**). After the optotype is displayed to the subject **18**, the subject **18** or the clinician **14** may utilize a user input device **24** (e.g., a wireless mouse) in order to transmit the response of the subject **18** to the computing device **102**, **202**, **302** (e.g., the wireless mouse may have four buttons, each of which corresponds to one of the four configurations of the optotype). After receiving the subject's response, the computing device **102**, **202**, **302** is specially programmed to determine if the subject correctly determined the configuration of the optotype that was displayed on the output screen of the visual display device **104**, **204**, **304**. For example, if the optotype **10'***b* of FIG. **6** was displayed on the screen, the subject **18** must indicate that optotype is pointing down to get the identification correct. Any other answer would be incorrect for this configuration of the optotype. Once the subject's answer or response is evaluated as to its correctness, the computing device **102**, **202**, **302** is specially programmed to record whether or not the subject **18** identified the optotype correctly. In one exemplary embodiment, if the subject **18** identifies the configuration of the optotype **10'***b* correctly, the computing device **102**, **202**, **302** is specially programmed to display one or more subsequent optotypes for a display time that is shorter than the initial display time (e.g., the second trial may display the subsequent optotype on the screen for a display time of only 50 milliseconds, rather than the 60 milliseconds that was used during the initial trial). Conversely, if the subject **18** identifies the configuration of the first optotype **10'***b* incorrectly, the computing device **102**, **202**, **302** is specially programmed to display one or more subsequent optotypes for a display time that is longer than the initial display time (e.g., the second trial may display the subsequent optotype on the screen for a display time of 70 milliseconds, rather than the 60 milliseconds that was used during the initial trial).

In this manner, as specified in step **520** of FIG. **13**B, the computing device **102**, **202**, **302** is specially programmed to incrementally decrease or increase the display time for the visual object on the output screen of the visual display device **104**, **204**, **304** during a set of successive trials (e.g., during a maximum number **624** of fourteen (14) trials as indicated in FIGS. **16** and **17**). During the set of successive trials, various configurations of the same-sized visual object may be displayed on the output screen of the visual display device **104**, **204**, **304** for identification by the subject. For example, if the subject identifies a configuration of the same-sized optotype correctly, the screen display time for next-displayed optotype is generally decreased, while the screen display time for next-displayed optotype is generally increased if the subject fails to correctly identify the configuration of the optotype correctly. In the exemplary embodiment, after each optotype is displayed on the output screen of the visual display device **104**, **204**, **304** for a particular display time, the computing device **102**, **202**, **302** is specifically programmed to determine whether or not the subject **18** correctly identified the configuration of the optotype. In step **522** of FIG. **13**B, after the subject **18** has completed a predetermined number of trials of optotype identification, the computing device **102**, **202**, **302** is specifically programmed to determine a threshold visual processing time for the subject **18** based upon the performance of the subject **18** during the set of successive trials during which the subject **18** maintained the generally fixed position of his or her head **30**. For example, after the subject completes a series of fourteen (14) trials of optotype identification, the computing device **102**, **202**, **302** determines that the visual processing time for the subject **18** is fifty-five (55) milliseconds. In one embodiment, the visual processing time for the subject **18** is a calculated value that is determined using one or more statistical equations or formulas (e.g., using a Best-PEST algorithm as described hereinafter).

Then, in step **524** of FIG. **13**B, the computing device **102**, **202**, **302** is specifically programmed to generate a quantitative assessment of the subject's performance during the visual processing time test, and finally, in step **526** of FIG. **13**B, to output the quantitative assessment of the subject's performance during the visual processing time test on the output screen of the visual display device **104**, **204**, **304**. For example, in an exemplary embodiment, the computing device **102**, **202**, **302** may generate a report **720**, such as that explained above with regard to FIG. **27**, in order to display the test results from the visual processing time test.

In one or more embodiments, the dynamic visual acuity (DVA) test is performed together with the gaze stabilization test. In this case, when the two tests are performed as part of a consecutive series, the optotype identification trials performed while the subject's head **30** is in a generally fixed position (i.e., a static head condition) only need to be performed once. That is, these optotype identification trials performed during the first static set of successive trials and the second static set of successive trials performed in conjunction with the visual processing time test do not need to be repeated for both the dynamic visual acuity (DVA) test and the gaze stabilization test (GST). Thus, if steps **400** through **426** of the dynamic visual acuity (DVA) test were performed prior to the gaze stabilization test for a particular subject **18**, there would be no need to perform steps **500** through **526** described above. Rather, after finishing the dynamic visual acuity (DVA) test, the testing procedure would immediately proceed with step **528** of the gaze stabilization test, as will be described hereinafter.

Referring again to FIG. **13**B, the dynamic portion of the gaze stabilization test (GST) will be explained in detail. Initially, in step **528** of FIG. **13**B, while the subject **18** displaces his or her head **30** at a velocity or speed within a predetermined range (e.g., between 85 and 120 degrees per second) as measured by the motion sensing device **28**, one or more configurations of the optotype **10** having a third size are

displayed in succession on the output screen of the visual display device **104**, **204**, **304**. In one or more embodiments, the optotype of step **528** has a third size that is greater than the size of the threshold version of the optotype determined in step **510**. In these embodiments, the size of the threshold version of the optotype determined in step **510** may be multiplied by a scale factor (e.g., 1.5 or 1.75) to arrive at the third size (i.e., the increased size) of the optotype to be used in step **528**. For example, during this step, different configurations of the Landolt C optotype or tumbling E optotype having the third size may be displayed one-at-time on the output screen of the visual display device **104**, **204**, **304**. In one exemplary embodiment, the displacement of the subject's head **30** may comprise rotating the subject's to the right, and to the left, about the yaw axis **66** of FIG. **10** (i.e., approximately in a horizontal plane). As described above, the subject **18** may rotate his or head **30** on his or her own, or alternatively, the clinician **14** may rotate the subject's head **30** with his or her hands **32** so that it is easier to maintain the subject's head rotation within the predetermined range (see e.g., FIGS. **1** and **3**). In one embodiment, the optotype **10** is only displayed on the output screen of the visual display device **104**, **204**, **304** when the head **30** of the subject **18** is being rotated within an initial predetermined velocity range (e.g., between 40 and 60 degrees per second). In one or more embodiments, a Tumbling E optotype is displayed after the subject **18** gets the three (3) required head sweeps in a predetermined target velocity range (e.g., 40 deg./sec. to 60 deg./sec.). During the dynamic portion of the gaze stabilization test (GST), the computing device **102**, **202**, **302** may be specially programmed to randomly choose whether to display the optotype on a left head turn or a right head turn. Also, during the dynamic portion of the GST, the computing device **102**, **202**, **302** may be specially programmed to randomly choose the orientation of the optotype that is displayed on the screen. In one or more embodiments, the optotype size during the performance of the GST is determined by increasing the optotype size determined in conjunction with the first set of successive trials by two sizes (e.g., by adding 0.2 log MAR to the static visual acuity determined during the first set of successive trials). In addition, the first visual indicators **50**, **51**, and **60** described above in conjunction with FIGS. **7-9** may be used to ensure that the subject's head **30** is rotated within the predetermined velocity range, while the second visual indicator **48** may be used to ensure that the subject's head **30** is rotated within the prescribed range of motion (e.g., between 20 degrees to the left and 20 degrees to the right, or between 30 degrees to the left and 30 degrees to the right). Alternatively, the visual indicators described above in conjunction with FIGS. **21-24** may be displayed on the subject screen to ensure that the subject's head **30** is rotated within the predetermined velocity range.

After the optotype disappears during the dynamic portion of the gaze stabilization test (GST), the subject **18** stops shaking his or her head, and gives an orientation response to the operator or clinician identifying the orientation of the optotype that appeared on the screen. In one or more embodiments, approximately five-hundred (500) milliseconds after the operator or clinician records the orientation response of the subject **18**, the next trial of the DVA test begins, wherein another optotype is displayed after the subject **18** gets the three (3) required head sweeps in the predetermined target velocity range. In one or more embodiments, if a trial of the dynamic portion of the GST lasts for more than eight (8) seconds, the computing device **102**, **202**, **302** may be specially programmed to interrupt the trial, and to automatically reduce the tested velocity to make the test trial easier to complete. Also, if the subject is unable to maintain the target head velocity for three (3) consecutive head sweeps, the computing device **102**, **202**, **302** may be specially programmed to automatically reduce the tested velocity, or to mark the trial as "unable to complete" or a "failed trial".

In alternative exemplary embodiments, rather than rotating his or her head **30** about the yaw axis **66** in FIG. **10**, the subject **18** may alternatively rotate his or her head **30** about the pitch axis **62** (i.e., approximately in a vertical plane) or about the roll axis **64** (i.e., in a roll plane). The computing device **102**, **202**, **302** is specially programmed to allow the user to selectively choose any one of these rotational directions when performing the dynamic portion of the gaze stabilization test (GST).

An exemplary operator or clinician screen image **686**, which may be displayed on the visual display device **104**, **204**, **304** during the dynamic set of successive trials of the GST when the subject **18** rotates his or her head **30** within a predetermined angular velocity range, is shown in FIG. **25**. In one or more embodiments, the computing device **102**, **202**, **302** may be specially programmed to generate the screen image **686** of FIG. **25** during the performance of this latter dynamic portion of the GST. As shown in FIG. **25**, a set of on-screen virtual selection buttons **687***a*, **687***b* are provided at the top center of the screen for selecting one of: (i) a practice mode (by clicking on button **687***a*), and (ii) an actual GST test mode (by clicking on button **687***b*). With reference again to FIG. **25**, it can be seen that testing guidelines **688** may be displayed at the top of the screen image **686**. The testing guidelines may specify a distance or distance range (e.g., approximately ten (10) feet or between eight (8) and sixteen (16) feet) for the placement of the subject **18**, visual display device height adjustment instructions, instructions regarding the readiness of the subject, and additional instructions regarding the practice modes (the practice modes of the gaze stabilization test will be described hereinafter). As additionally shown in FIG. **25**, a graph **690** is also displayed in the center of the screen in order to visually illustrate the target angular velocity level for each successive trial while the subject's head **30** is rotated to the left and right. That way, the operator or clinician is able to easily view the subject's performance during the progression of the testing. As shown in FIG. **25**, the y-axis **696** of the graph **690** is the target angular velocity (e.g., in degrees per second), while the x-axis **698** of the graph **690** is the trial number of the dynamic set of successive trials of the GST (i.e., while the head **30** of the subject **18** is rotated to the left and right). In the graph **690** of FIG. **25**, it can be seen that stimulus curves **697**, **699** are provided for both the right and left directions of head movement. Referring again to FIG. **25**, it can be seen that the small box **692** on the right center of the clinician screen image **686** is configured to display the target angular velocity (e.g., in degrees per second) during the current trial of the dynamic GST testing procedure. Advantageously, the display of the target angular velocity in the small box **692** allows the clinician to quickly ascertain the subject's current performance level during the execution of the test. In one or more embodiments, after the optotype disappears from the subject screen, the computing device **102**, **202**, **302** is specially programmed to display the average head velocity for the trial in the small box **692**. In the screen image **686** of FIG. **25**, test summary data **694** is displayed below, and to the left of the graph **690** on the screen. For example, as shown in FIG. **25**, the test summary data **694** may include the baseline visual processing time (i.e., baseline PTT in milliseconds), the current angular velocity threshold in degrees per second for both left and right head rotation, the optotype display size during the GST, and the current target

angular velocity in degrees per second for the subject **18**. In one or more embodiments, some values of the test summary data may be automatically completed as each of the test portions is successively completed (e.g., static visual acuity, visual processing time, dynamic visual acuity, and gaze stabilization).

Now, the practice mode of the gaze stabilization test (GST) will be described. In one or more embodiments, if the subject has not performed the dynamic visual acuity test prior to the gaze stabilization test, the subject may initially perform the position practice described above in conjunction with FIG. **20**, and the velocity practice described above in conjunction with FIGS. **21-24**. Alternatively, if the subject has already performed the dynamic visual acuity test prior to the gaze stabilization test, the practice for the GST may comprise only a single mode, namely the gaze stabilization test (GST) practice. In such a case, it is not necessary to repeat the position practice and the velocity practice because the subject will have just completed the DVA test and be familiar with the required head movement. The purpose of the GST practice is to allow the subject **18** to become familiar with varying his or her head velocity between trials. The GST practice mode is very similar to the DVA velocity practice described above in that the optotype **10** is always displayed at a large size in the same direction for an extended amount of time. However, during the GST practice mode, the computing device **102**, **202**, **302** may be specially programmed to vary the target head velocity for the subject **18** among the following three head velocities: (i) 120 degrees per second, (ii) 50 degrees per second, and (iii) 160 degrees per second to give the subject **18** an idea of a medium, slow, and fast target head velocity. Initially, during the GST practice mode, the subject **18** may be instructed to slowly begin moving his or her head **30** in the selected direction (i.e., left or right) with an initial head velocity of approximately twenty (20) degrees per second. Once, the subject becomes comfortable with rotating his or her head at a velocity of approximately twenty (20) degrees per second, the subject is instructed to gradually increase his or her rotational head velocity until the grayscale color of the outer circle on the screen matches the grayscale color of the inner circle on the screen. After the initial velocity of twenty (20) degrees per second, the subject rotates his or her head at an approximate practice velocity of fifty (50) degrees per second (i.e., in a range between 40 degrees per second and 60 degrees per second). During the GST practice mode, the computing device **102**, **202**, **302** may be specially programmed to randomly choose whether to display the optotype on a left head turn or a right head turn. Also, during the GST practice mode, the computing device **102**, **202**, **302** may be specially programmed to randomly choose the orientation of the optotype. In one or more embodiments, the optotype size during the performance of the GST practice mode is determined by increasing the optotype size determined in conjunction with the first set of successive trials by two sizes (e.g., by adding 0.2 log MAR to the static visual acuity determined during the first set of successive trials). Similar to the DVA practice mode described above, in one or more embodiments of the GST practice mode, approximately five-hundred (500) milliseconds after the operator or clinician records the orientation response of the subject **18**, the next trial of the practice mode begins, wherein another optotype is displayed after the subject **18** gets the three (3) required head sweeps in the predetermined target velocity range. The practice mode may be continued until the subject **18** clearly understands the task that is being performed during the testing. The computing device **102**, **202**, **302** may be specially programmed to stop the practice mode when either the subject **18** or the operator presses the "ESC" key on the keyboard of the computing device **102**, **202**, **302**.

Referring again to the flowchart of FIG. **13**B, the computing device or data processing device **102**, **202**, **302** determines whether or not the subject **18** correctly identifies one or more configurations (e.g., **10'***a*, **10'***b*, **10'***c*, **10'***d*) of the visual object **10'** having the third size in step **530**. For example, the subject **18** may be presented with one or more optotypes have the third size (e.g., a single optotype **10'***a* pointing up). Unlike the dynamic set of trials performed during the dynamic visual acuity (DVA) test, each of the optotypes in the dynamic set of trials performed during the gaze stabilization test has the same physical size (i.e., each optotype has the same increased third size that is determined based upon the threshold size computed for the first series of trials carried out in steps **500-510** above). After each optotype in the trial is displayed to the subject **18**, the subject **18** or the clinician **14** may utilize a user input device **24** (e.g., a wireless mouse) in order to transmit the response of the subject **18** to the computing device **102**, **202**, **302** (e.g., the wireless mouse may have four buttons, each of which corresponds to one of the four configurations of the optotype). After receiving each of the subject's responses, the computing device **102**, **202**, **302** is specially programmed to determine if the subject correctly determined the configuration of the optotype that was displayed on the output screen of the visual display device **104**, **204**, **304**. For example, if the optotype **10'***a* of FIG. **6** was displayed on the screen, the subject **18** must indicate that optotype is pointing up to get the identification correct. Any other answer would be incorrect for this configuration of the optotype. Once the subject's answer or response is evaluated as to its correctness, the computing device **102**, **202**, **302** is specially programmed to record whether or not the subject **18** identified the optotype correctly. In one exemplary embodiment, if the subject **18** identifies the configuration of the optotype **10'***a* correctly, the computing device **102**, **202**, **302** is specially programmed to display a next optotype **10'** while requiring the subject **18** to displace his or her within an increased velocity range (e.g., in a velocity range from 60 degrees per second to 80 degrees per second). Conversely, if the subject **18** identifies the configuration of the optotype **10'***a* incorrectly, the computing device **102**, **202**, **302** is specially programmed to display a next optotype **10'** while requiring the subject **18** to displace his or her head **30** within a decreased velocity range (e.g., in a velocity range from 30 degrees per second to 40 degrees per second). While the velocity range in which the subject **18** is required to maintain his or her head **30** varies depending on whether the subject **18** correctly identifies the configuration of the optotype, the size of the optotype does not change. Rather, the same optotype size is used throughout the dynamic series of trials of the gaze stabilization test.

In this manner, as set forth in step **532** of FIG. **13**B, the computing device **102**, **202**, **302** is specially programmed to incrementally decrease or increase the predetermined angular velocity or speed range within which the subject **18** is to displace his or her head **30** while identifying one or more configurations of the visual object (e.g., the optotype **10'**) on the output screen of the visual display device **104**, **204**, **304** during a third set of successive trials, the angular velocity or speed of the head **30** of the subject **18** being measured by the motion sensing device **28** (e.g., during a maximum number **676** of twenty-eight (28) trials as indicated in FIGS. **21-24**). In one exemplary embodiment, the lower limit for the angular velocity or speed is 30 degrees per second, while the upper limit for the angular velocity or speed is 200 degrees per

second (i.e., during the gaze stabilization testing procedure, the angular velocity or speed may be decreased down to 30 degrees per second and may be increased up to 200 degrees per second). For example, if the subject identifies the configuration of an optotype correctly, the predetermined velocity or speed range is generally increased, while the predetermined velocity or speed range is generally decreased if the subject fails to correctly identify the configuration of the optotype correctly. In the exemplary embodiment, after each optotype is displayed on the output screen of the visual display device **104**, **204**, **304**, the computing device **102**, **202**, **302** is specifically programmed to determine whether or not the subject **18** correctly identified the configuration of the optotype.

In one or more embodiments, the computing device **102**, **202**, **302** is specially programmed with a high performance gaze stabilization testing mode to challenge subjects **18** having heightened dynamic vision capabilities (e.g., young, experienced athletes, etc.). When testing in the yaw direction (i.e., rotation **72** about the yaw axis **66**—see FIG. **10**), a user is able to select a high performance mode for the gaze stabilization test (GST). In the normal mode, the GST tests target head velocities ranging from thirty (30) degrees per second to two-hundred (200) degrees per second, inclusive. In contrast, the high performance GST mode increases this range from between seventy (70) degrees per second and three-hundred (300) degrees per second, inclusive. For example, the high performance GST mode should be selected for athlete testing and training. In the normal mode, thirty (30) degrees per second was selected as the lower limit of the range because it was found that thirty (30) degrees per second was lowest reasonable head velocity that an individual could maintain. In the normal mode, two-hundred (200) degrees per second was selected as the upper limit of the range because it was found that the ability of a "normal" person lies very close to a one-hundred and fifty (150) degrees per second limit. Therefore, in order to prevent the typical subject or patient from "maxing out" the normal GST test and having to spend time redoing the GST by performing a test using the high performance GST mode, an upper limit of two-hundred (200) degrees per second was selected to provide a "cushion" above one-hundred and fifty (150) degrees per second. During the performance of GST test, the computing device **102**, **202**, **302** may be specially programmed with a default resolution of ten (10) degrees per second for the angular velocity range. Although, the computing device **102**, **202**, **302** may be specially programmed to allow a user to adjust the resolution within the range of between ten (10) degrees per second and fifty (50) degrees per second in increments of ten (10) degrees per second. For example, with the default resolution setting, when performing the GST test, the angular velocity that is presented to the subject may be 30 degrees per second, 40 degrees per second, 50 degrees per second, 60 degrees per second, etc.

Also, in these one or more embodiments, the computing device **102**, **202**, **302** may be specially programmed with an option that allows a user (e.g., the operator or clinician) to switch to the high performance GST mode if a subject or patient has maxed out the normal GST test. For example, while a test is being performed in the normal GST mode, and a subject or patient gets two correct answers at the target head velocity level of 200 degrees per second, the computing device **102**, **202**, **302** may be specially programmed to generate a dialogue box that appears on the output screen of the visual display device **104**, **204**, **304** informing the operator or clinician that the subject or patient may be better suited for the high performance GST mode, and by giving the operator or clinician the option to end the normal GST early and switch to the high performance mode GST. If the operator or clinician chooses to switch the mode, the computing device **102**, **202**, **302** is specially programmed to restart the test in the high performance GST mode with the extended velocity range (i.e., between seventy (70) degrees per second and three-hundred (300) degrees per second). In contrast, if the operator or clinician declines to switch the mode, the test will continue where it left off in the normal GST mode.

In step **534** of FIG. **14**, after the subject **18** has completed a predetermined number of trials of optotype identification (e.g., twenty-eight (28) total trials), the computing device **102**, **202**, **302** is specifically programmed to determine a maximum head velocity or head speed at which the subject is capable of correctly identifying one or more configurations of the visual object (i.e., the optotype). For example, after the subject **18** completes a series of twenty-eight (28) trials of optotype identification, the computing device **102**, **202**, **302** determines that the maximum angular velocity or head speed at which the subject is capable of correctly identifying one or more configurations of the optotype is 80 degrees per second.

In one or more embodiments, during the third set of successive trials during which the head **30** of the subject **18** is displaced, the maximum head velocity or head speed is determined by the computing device **102**, **202**, **302** for both the right and left directions of head movement about the yaw axis **66** of the FIG. **10** (e.g., fourteen (14) total trials are performed for left head rotation and fourteen (14) total trials are performed for right head rotation). That is, a first maximum head velocity or head speed is determined for the left rotation of the subject's head **30** about the yaw axis **66**, and a second maximum head velocity or head speed is determined for the right rotation of the subject's head **30** about the yaw axis **66**. For example, the maximum angular velocity or head speed for left rotation of the subject's head **30** may be 160 degrees per second, while the maximum angular velocity or head speed for right rotation of the subject's head **30** may be 140 degrees per second.

Next, in step **536** of FIG. **14**, the computing device **102**, **202**, **302** is specifically programmed to generate a quantitative assessment of gaze stabilization based upon the computed maximum head velocity or head speed at which the subject **18** is capable of correctly identifying one or more configurations of the visual object (i.e., the optotype) on the output screen of the visual display device **104**, **204**, **304**. Then, in step **538** of FIG. **14**, the computing device **102**, **202**, **302** is specifically programmed to output the quantitative assessment of the gaze stabilization of the subject **18** on the output screen of the visual display device **104**, **204**, **304**. The gaze stabilization testing procedure concludes at step **540** in FIG. **14**.

With reference to FIGS. **29**A and **29**B, the content of an exemplary test report for the third dynamic set of successive trials of the gaze stabilization test (GST) will be described. As shown in FIG. **29**A, it can be seen that selected test parameters **788** may be displayed at the top of the screen image **786***a*. The test parameters **788** may include: (i) the direction of head rotation during dynamic portions of the DVA test (i.e., about the yaw axis **66** of FIG. **10**), (ii) the approximate distance (e.g., in feet) between the subject and the visual display device **104**, **204**, **304**, (iii) the optotype threshold sizes determined during the dynamic visual acuity (DVA) test (e.g., in log MAR or relative log MAR), (iv) optotype size during the GST test (e.g., in log MAR), (v) the optotype display time (e.g., as determined during the visual processing time test described above), (vi) the head velocity range used for the gaze stabilization test (e.g., in degrees per second), (vii)

whether or not progressive or corrective lenses (i.e., glasses or contact lens) are worn by the subject, and (viii) the maximum head velocities or head speeds (e.g., in degrees per second) that were computed for the left and right head movement directions of the subject **18** based upon his or her performance of the gaze stabilization test. As additionally shown in FIG. **29**A, a patient results summary may also be displayed at the top of the screen image **786***a*, just below the test parameters summary. The patient results summary may include: (i) the static visual acuity of the subject (e.g., in log MAR or relative log MAR), (ii) the visual processing time of the subject (e.g., in milliseconds), (iii) the optotype threshold sizes for the left and right head rotational directions (e.g., in log MAR or relative log MAR) determined during the dynamic visual acuity (DVA) test, and (iv) the maximum or threshold head velocities for the left and right head rotational directions (e.g., in degrees per second) determined during the gaze stabilization test (GST).

Referring again to FIG. **29**A, it can be seen that a graph **792** is displayed in the central portion of the screen in order to visually illustrate the subject's head rotational velocity for each successive trial while the subject's head **30** is rotated to the left and to the right. That way, the operator or clinician is able to easily observe any trends that occurred during the testing (i.e., consistent incorrect answers, consistent correct answers, etc.) and to easily assess whether or not the testing results follow a normal trend (e.g., transient response-type curve as explained hereinafter). Also, the graph **792** enables the operator or clinician to quickly and easily determine if the subject **18** achieved normal results during the gaze stabilization test (e.g., if the test results of the GST are normal, then each of the curves **796**, **798** should resemble a typical transient response curve (e.g., a damped oscillation curve) where the amplitude at the beginning of the curve is relative large and oscillatory, but then settles down to a curve of much smaller amplitude and minimum oscillations (e.g., the latter portion of the curve approximates a straight line)). As shown in FIG. **29**A, the y-axis **794** of the graph **792** is the target head velocity (e.g., in degrees per second), while the x-axis **795** of the graph **792** is the trial number of the dynamic set of successive of trials during the gaze stabilization test (GST) while the subject's head **30** is rotated to the left and to the right. In FIG. **29**A, it can be seen that two curves **796**, **798** are plotted on the graph **792**. The first curve **796** is a plot of the test results for the left rotation of the head **30** of the subject **18**, while the second curve **798** is a plot of the test results for the right rotation of the head **30** of the subject **18**. At the beginning of the test, it can be seen that the two curves **796**, **798** coincide with another (i.e., up to the fourth trial). However, after the fourth trial for both left and right head movement of the subject **18**, the curves **796**, **798** begin to deviate from one another (i.e., the target head velocity is generally greater for the left head rotation between the fourth trial and twelfth trial as compared to that tested for right head rotation). At the end of the dynamic set of successive trials of the GST, the curves **796**, **796** are generally spaced apart from one another by a constant distance.

Now turning to FIG. **29**B, it can be seen that a table **800** with the GST test results in tabular form may be displayed in the top half of the screen image **786***b*. As shown in FIG. **29**B, the test data, which is plotted in the graph **792** of FIG. **29**A, is presented in tabular form in table **800**. The table **800** in FIG. **29**B generally comprises a set of five (5) columns **802***a*, **804***a*, **806***a*, **808***a*, **810***a* on the left-hand side thereof, and another set of five (5) columns **802***b*, **804***b*, **806***b*, **808***b*, **810***b* on the right-hand side thereof. The five (5) columns **802***a*, **804***a*, **806***a*, **808***a*, **810***a* on the left-hand side correspond to the test results for the left rotation of the subject's head **30**, while the five (5) columns **802***b*, **804***b*, **806***b*, **808***b*, **810***b* on the right-hand side correspond to the test results for the right rotation of the subject's head **30**. The leftmost column **802***a* of the table **800** lists the trial number (i.e., trials nos. 1 through 12) for left head rotation, the next column **804***a* to the right lists the target angular head velocity (i.e., in degrees per second) for left head rotation, the next column **806***a* to the right lists the angular velocity achieved during the left head rotation trial, the next column **808***a* to the right lists the percentage of the velocity that was in the plane of movement (i.e., about the yaw axis **66**) for left head rotation, and the final column **810***a* corresponding to left head rotation lists whether or not the subject or patient response was correct or incorrect for each of the left rotation trials in the table **800**. Similarly, the leftmost column **802***b* corresponding to right head rotation in the table **800** lists the trial number (i.e., trials nos. 1 through 14) for right head rotation, the next column **804***b* to the right lists the target angular head velocity (i.e., in degrees per second) for right head rotation, the next column **806***b* to the right lists the angular velocity achieved during the right head rotation trial, the next column **808***b* to the right lists the percentage of the velocity that was in the plane of movement (i.e., about the yaw axis **66**) for right head rotation, and the rightmost column **810***b* of the table **800** lists whether or not the subject or patient response was correct or incorrect for each of the right rotation trials in the table **800**. Advantageously, the table **800** allows the operator or clinician to quickly ascertain the subject's numerical results for the dynamic set of trials performed during the GST test.

In one or more embodiments, a baseline visual processing time and static visual acuity value must have been previously stored in the computing device **102**, **202**, **302** in order to permit the subject **18** to perform the dynamic portion of the gaze stabilization test (GST). For example, if no baseline visual processing time and static visual acuity was previously determined on the day of the GST test, the subject **18** must first complete the static visual acuity testing and the visual processing time testing prior to performing the dynamic portion of the gaze stabilization test (GST).

In an alternative embodiment, in conjunction with steps **536** and **538** of FIG. **14**, the computing device **102**, **202**, **302** may generate a graph or chart that graphically depicts the computed maximum angular velocity or head speed value or values. In the embodiments wherein the maximum angular velocity or head speed is determined for both the right and left directions of head movement of the subject **18**, the graph or chart may graphically depict the computed maximum angular velocity or head speed for both the right and left movement directions. Advantageously, the graph or chart generated by the computing device **102**, **202**, **302** allows the clinician **14** to easily assess the maximum gaze stabilization (GST) velocity for both the right and left directions of movement. The computing device **102**, **202**, **302** may additionally generate another graph or chart that displays the maximum angular velocity or head speed symmetry for the left and right directions of movement in terms of a percentage difference between the right and left directions of movement. For example, the percentage difference between the right and left directions of movement may be computed using the following equation:

$$\%_{Difference} = \left(\frac{V_{max\_L} - V_{max\_R}}{V_{max\_L} + V_{max\_R}} \right) \quad (11)$$

where:

V_{max_L}: maximum angular velocity for the left direction of head movement; and

V_{max_R}: maximum angular velocity for the right direction of head movement.

Then, after computing the percentage difference between the right and left directions of movement, the computing device **102**, **202**, **302** is specially programmed to output the graph or chart that graphically displays the percentage difference between the right and left directions of movement on the output screen of the visual display device **104**, **204**, **304**. The gaze stabilization testing procedure concludes at step **540** in FIG. **14**.

As briefly mentioned above, the stimulus levels during the successive trials of the vision testing may be determined by the computing device **102**, **202**, **302** by means of executing a parameter estimation algorithm (e.g., Best-PEST algorithm). In particular, during the first static set of successive trials during the dynamic visual acuity (DVA) test and the gaze stabilization test (GST), the optotype size selected for each trial, and the threshold optotype size computed in steps **410** and **510**, may be computed using the parameter estimation algorithm (e.g., the Best-PEST algorithm). In one or more embodiments, the threshold optotype size of steps **410** and **510** may be computed by taking an average of the stimulus levels (i.e., optotype sizes) determined for a predetermined number of the final trials in the series (e.g., the optotype sizes determined for the last three or four trials in the series may be averaged to obtain the threshold optotype size). Similarly, during the visual processing time test performed in conjunction with DVA test and the GST, the optotype display time selected for each trial, and the threshold visual processing time computed in steps **422** and **522**, may be computed using the parameter estimation algorithm (e.g., the Best-PEST algorithm). In one or more embodiments, the threshold visual processing time of steps **422** and **522** may be computed by taking an average of the stimulus levels (i.e., optotype display times) determined for a predetermined number of the final trials in the series (e.g., the optotype display times determined for the last three or four trials in the series may be averaged to obtain the threshold visual processing time). Also, during the dynamic set of successive trials performed in conjunction with the dynamic visual acuity (DVA) test, the optotype size selected for each trial, and the threshold optotype size computed in step **434**, may be computed using the parameter estimation algorithm (e.g., the Best-PEST algorithm). In one or more embodiments, the threshold optotype size of step **434** may be computed by taking an average of the stimulus levels (i.e., optotype sizes) determined for a predetermined number of the final trials in the series (e.g., the optotype sizes determined for the last three or four trials in the series may be averaged to obtain the threshold optotype size). In addition, during the dynamic set of successive trials performed in conjunction with the gaze stabilization test (GST), the target head velocity range selected for each trial, and the maximum head velocity computed in step **534**, may be computed using the parameter estimation algorithm (e.g., the Best-PEST algorithm). In one or more embodiments, the maximum head velocity in step **534** may be computed by taking an average of the stimulus levels (i.e., target velocities) determined for a predetermined number of the final trials in the series (e.g., the target velocities determined for the last three or four trials in the series may be averaged to obtain the maximum head velocity). As such, the parameter estimation computations performed by the computing device **102**, **202**, **302** will be explained in detail hereinafter.

Initially, the computing device **102**, **202**, **302** determines the psychometric function of the subject **18** as a function of the subject's stimulus level. In general terms, this psychometric function represents the relationship between the subject's visual acuity and the likelihood of the subject correctly identifying the optotype, which can be expressed by the following equation:

$$\Psi(x;\alpha,\beta,\gamma,\lambda)=\gamma+(1-\gamma-\lambda)f(x;\alpha,\beta) \tag{12}$$

where:

$f(x)$: sigmoid function representing the probability of the subject correctly identifying the optotype as a function of the parameters: x, β, and β.

x: stimulus level presented to the subject (i.e., the optotype size, display time, or velocity);

α: determines the displacement of the sigmoid function along the abscissa;

β: determines the slope of the sigmoid function;

γ: represents the false alarm tendency of the subject (i.e., the chance level); and

λ: represents the rate of attention lapses of the subject.

In the illustrative embodiment, the computing device **102**, **202**, **302** utilizes a logistic sigmoid function for the function $f(x)$, which is given by the following equation:

$$f(x) = \frac{1}{1 + e^{\beta(\alpha - x)}} \tag{13}$$

As such, the computing device **102**, **202**, **302** utilizes the following logistic psychometric function in the vision testing threshold computations:

$$\Psi = \gamma + (1 - \gamma - \lambda)\left[\frac{1}{1 + e^{\beta(\alpha - x)}}\right] \tag{14}$$

In above equation (14), α (which is often referred to as the midpoint) enables the displacement of the function along the stimulus-level axis. The α value corresponds to the average between γ and λ (i.e., $\Psi(\alpha)=(\gamma+\lambda)/2$). The β value is the function slope (i.e., the rate of change in the subject's performance with changes in stimulus level). As such, the greater the absolute value of β, the greater resultant steepness of the psychometric function. In addition, the function increases for positive values of β, while the function decreases for negative values of β.

In the vision tests described above, the computing device **102**, **202**, **302** determines the subject's threshold based upon a single point of the psychometric function. In the illustrative embodiment, the computational procedure executed by the computing device **102**, **202**, **302** is adaptive (i.e., the stimulus levels for the subject **18** are selected at the same time the testing is being performed, and the next stimulus level that is presented to the subject **18** is dependent on the subject's previous answer). Also, in the illustrative embodiment, the computational procedure executed by the computing device **102**, **202**, **302** is a parametric procedure.

In the illustrative embodiment, the computing device **102**, **202**, **302** executes a maximum likelihood procedure in order to determine the next stimulus level that is presented to the subject. The maximum likelihood procedure comprises two independent processes, namely a maximum likelihood estimation and a stimulus selection policy.

Initially, the maximum likelihood estimation process that is carried out by the computing device **102**, **202**, **302** will be

explained. Prior to the commencement of the vision testing, several psychometric functions (i.e., hypotheses) are established. In the illustrative embodiment, the hypotheses have the same slope β, attentional lapse rate λ, and chance level γ, but differ in midpoint α so as to cover the range of stimulus levels at which subject's threshold is expected to lie within. In the illustrative embodiment, each of the vision tests begins with presenting the subject with a stimulus level that is above threshold. The subject's response is then collected and utilized by the computing device **102**, **202**, **302** to calculate the likelihood of each hypothesis. In particular, the likelihood is calculated by using the following equation:

$$L(H_j) = \prod_{i=1}^{n} H(x_i)^C [1 - H(x_i)]^W \tag{15}$$

where:

$L(H_j)$: is the likelihood of the jth hypothesized function; and

i: is the trial number.

The exponents C and W in equation (15) are equal to 1 and 0, respectively, when subject's response is correct, and to 0 and 1 otherwise (i.e., when subject's response is incorrect). The product in equation (15) can be simplified into a sum by means of a logarithmic transformation in the following manner:

$$L(H_j) = \sum_{i=1}^{n} C \log H(x_i) + W \log[1 - H(x_i)] \tag{16}$$

After the likelihood of each hypothesis has been calculated by the computing device **102**, **202**, **302**, the highest likelihood hypothesis is selected using the maximum likelihood procedure. The highest likelihood hypothesis is the one having the greatest likelihood of resembling the actual subject's psychometric function. The highest likelihood hypothesis is identified by its midpoint α. The likelihood of the hypothesis is calculated by the computing device **102**, **202**, **302** after each trial of the vision testing. As such, even after the very first trial, a maximum likelihood estimate is returned by the executed procedure. Although, the maximum likelihood estimate returned after the first trial may be highly inaccurate. As the number of trials increases, the maximum likelihood estimate becomes increasingly more accurate. Consequently, the best maximum likelihood estimate is that which is generated by computing device **102**, **202**, **302** based upon an average of the last few trials in the series of trials (i.e., based upon an average of a last predetermined number of trials in the series, e.g., the last three or four trials).

After the most likely hypothesis has been determined using the maximum likelihood estimation process, the computing device **102**, **202**, **302** subsequently determines the level of the next stimulus that is to be presented to the subject. In the illustrative embodiment, the stimulus level at threshold is set to the p-target value. The maximum likelihood procedure even has sufficient information to determine the threshold level, which is used as the stimulus for the successive trial, after the completion of the first trial in the series. The most likely threshold for the subject is included in the most likely hypothesis. As given by the equation below, the threshold is the inverse function of the most likely hypothesis at the p-target:

$$\Psi^{-1}(p_t) = \alpha_j - \frac{1}{B} \ln\left(\frac{1 - \gamma - \lambda}{p_t - \gamma} - 1\right) \tag{17}$$

where:

p_t: is the p-target.

Finally, with respect to the logistic function, the sweet point (p_{sw}) is calculated analytically by the computing device **102**, **202**, **302** using the following equation:

$$p_{sw} = \frac{2\gamma + 1 + \sqrt{1 + 8\gamma}}{3 + \sqrt{1 + 8\gamma}} \tag{18}$$

As such, in accordance with the above equation, if it is assumed that the subject does not produce any attention lapse, the sweet point (p_{sw}) depends exclusively on the chance level γ. Advantageously, the maximum likelihood procedure that is executed by the computing device **102**, **202**, **302** maximizes the use of all data that is available. That is, the data from all of the trials is used to estimate the subject's threshold.

In one or more alternative embodiments, a static visual acuity of the subject **18** is not determined in carrying out the steps of the dynamic visual acuity (DVA) testing procedure and the gaze stabilization testing procedure described above. That is, in these embodiments, the steps of the dynamic visual acuity (DVA) and gaze stabilization testing procedures are carried out without quantifying the static visual acuity of the subject **18** in terms of a static visual acuity number (e.g., a Snellen fraction, such as 20/20, 20/100, or 20/200). In these one or more embodiments, the static visual acuity of the subject **18** is not assessed using a Snellen eye chart, a Tumbling E eye chart, or a computerized version of the eye chart static visual acuity test. As such, in these one or more embodiments, there is no way to ascertain a quantifiable static visual acuity of the subject **18** because a recognized standard for determining the static visual acuity is not being used.

It is apparent from the above detailed description that the vision testing systems **100**, **200**, **300** and the methods performed thereby significantly advance the field of vision and vestibular assessment. For example, the vision testing systems **100**, **200**, **300** described herein greatly minimize subject or patient fatigue by utilizing visual and auditory feedback mechanisms that enable the subject or patient to more easily properly perform the DVA test and GST (e.g., the visual and auditory feedback mechanisms assist the subject in achieving the requisite angular velocity range and angular displacement range). As another example, the vision testing systems **100**, **200**, **300** described herein are capable of testing the dynamic visual acuity and gaze stabilization of a subject or patient in an extremely efficient manner by utilizing optimization threshold calculation procedures that quickly arrive at an accurate result. As yet another example, the ease of use of the vision testing systems **100**, **200**, **300** described herein is greatly enhanced by the use of innovative graphical user interfaces and improved hardware (e.g., a wireless motion sensing device **28**).

Any of the features or attributes of the above described embodiments and variations can be used in combination with any of the other features and attributes of the above described embodiments and variations as desired.

Although the invention has been shown and described with respect to a certain embodiment or embodiments, it is apparent that this invention can be embodied in many different

forms and that many other modifications and variations are possible without departing from the spirit and scope of this invention.

Moreover, while exemplary embodiments have been described herein, one of ordinary skill in the art will readily appreciate that the exemplary embodiments set forth above are merely illustrative in nature and should not be construed as to limit the claims in any manner. Rather, the scope of the invention is defined only by the appended claims and their equivalents, and not, by the preceding description.

The invention claimed is:

1. A system for testing the vision of a subject, said system comprising:

a motion sensing device, the motion sensing device configured to measure a velocity or speed of a head of a subject;

a visual display device having an output screen, the visual display device configured to display one or more visual objects on the output screen so that the one or more visual objects are visible to the subject;

a data processing device, the data processing device operatively coupled to the motion sensing device and the visual display device, the data processing device being specially programmed to:

display one or more configurations of one or more visual objects having a first initial size on the output screen of the visual display device while the subject maintains a generally fixed position of his or her head;

determine whether or not the subject correctly identifies the one or more configurations of the one or more visual objects having the first initial size;

incrementally decrease and/or increase the size of the one or more visual objects on the output screen of the visual display device during a first set of successive trials, and determine whether or not the subject correctly identifies one or more configurations of each of the differently sized visual objects during the first set of successive trials while the subject maintains a generally fixed position of his or her head;

determine a size parameter of a first threshold version of the one or more visual objects based upon a performance of the subject during the first set of successive trials during which the subject maintains the generally fixed position of his or her head, wherein the determination of the size parameter of the first threshold version of the one or more visual objects does not require the exact distance between the subject and the visual display device to be measured or determined;

display one or more configurations of the one or more visual objects having a second initial size on the output screen of the visual display device while the subject's head undergoes displacement at a velocity or speed within a predetermined range as measured by the motion sensing device;

determine whether or not the subject correctly identifies the one or more configurations of the one or more visual objects having the second initial size;

incrementally decrease and/or increase the size of the one or more visual objects on the output screen of the visual display device during a second set of successive trials, and determine whether or not the subject correctly identifies one or more configurations of each of the differently sized visual objects during the second set of successive trials when the subject's head undergoes displacement at a velocity or speed within the predetermined range as measured by the motion sensing device;

determine a size parameter of a second threshold version of the one or more visual objects based upon a performance of the subject during the second set of successive trials during which the subject's head undergoes displacement;

compare the size parameter of the second threshold version of the one or more visual objects to the size parameter of the first threshold version of the one or more visual objects; and

generate a quantitative assessment of dynamic visual acuity loss using the size parameters of the first and second threshold versions of the one or more visual objects.

2. The system according to claim **1**, wherein the motion sensing device comprises at least one of an accelerometer, a gyroscope, and a magnetometer.

3. The system according to claim **1**, wherein the motion sensing device is configured to be attached to the head of the subject by means of an adjustable band.

4. The system according to claim **1**, further comprising a user input device, the user input device configured to output an input signal in response to a manipulation of the user input device by a system user, the user input device being operatively coupled to the data processing device; and

wherein the determination of whether or not the subject correctly identifies the one or more configurations of the one or more visual objects during the first and second successive trials is based upon the input signal from the user input device.

5. The system according to claim **4**, wherein the user input device comprises at least one of: (i) a mouse, (ii) a keyboard, (iii) a clicking device, (iv) a voice recognition device, and (v) a joystick.

6. The system according to claim **1**, wherein the one or more visual objects displayed on the output screen of the visual display device comprise one or more optotypes, the one or more optotypes comprising at least one of: (i) a Tumbling E, (ii) a Landolt C, (iii) different letters of a recognized alphabet, and (iv) any other identifiable symbol.

7. The system according to claim **1**, wherein the second initial size of the one or more visual objects is equal to the first initial size of the one or more visual objects or the second initial size of the one or more visual objects is larger than the first initial size of the one or more visual objects.

8. The system according to claim **1**, wherein, during the second set of successive trials, the data processing device is further specially programmed to generate and display a visual indicator on the output screen of the visual display device that indicates whether or not the velocity or speed at which the subject's head is being displaced lies within the predetermined range.

9. The system according to claim **1**, wherein the data processing device is further specially programmed to generate a practice mode for the second set of successive trials during which the subject's head undergoes displacement; and wherein, during the practice mode, the data processing device is specially programmed to generate and display a visual indicator on the output screen of the visual display device that indicates whether or not the head of the subject is being displaced within a prescribed range of motion.

10. The system according to claim **1**, further comprising an auditory output device operatively coupled to the data processing device; and wherein, during the second set of successive trials, the data processing device is further specially programmed to generate and output an audible cue configured to assist the subject in achieving a head velocity or speed that lies within the predetermined range.

11. The system according to claim 1, wherein the one or more configurations of the one or more visual objects displayed on the output screen of the visual display device by the data processing device comprise a series of different visual objects displayed in succession on the output screen of the visual display device.

12. A system for testing the vision of a subject, said system comprising:

a motion sensing device, the motion sensing device configured to measure a velocity or speed of a head of a subject;

a visual display device having an output screen, the visual display device configured to display one or more visual objects on the output screen so that the one or more visual objects are visible to the subject;

a data processing device, the data processing device operatively coupled to the motion sensing device and the visual display device, the data processing device being specially programmed to:

display one or more configurations of one or more visual objects having a first initial size on the output screen of the visual display device while the subject maintains a generally fixed position of his or her head;

determine whether or not the subject correctly identifies the one or more configurations of the one or more visual objects having the first initial size;

incrementally decrease and/or increase the size of the one or more visual objects on the output screen of the visual display device during a first set of successive trials, and determine whether or not the subject correctly identifies one or more configurations of each of the differently sized visual objects during the first set of successive trials while the subject maintains a generally fixed position of his or her head;

determine a size parameter of a first threshold version of the one or more visual objects based upon a performance of the subject during the first set of successive trials during which the subject maintains the generally fixed position of his or her head, wherein the determination of the size parameter of the first threshold version of the one or more visual objects does not require the exact distance between the subject and the visual display device to be measured or determined;

display one or more configurations of the one or more visual objects having a second initial size on the output screen of the visual display device while the subject's head undergoes displacement at a velocity or speed within a predetermined range as measured by the motion sensing device;

determine whether or not the subject correctly identifies the one or more configurations of the one or more visual objects having the second initial size;

incrementally decrease and/or increase the predetermined velocity or speed range within which the subject's head is to be displaced while the subject identifies one or more configurations of the one or more visual objects during a second set of successive trials, and determine whether or not the subject correctly identifies the one or more configurations of the one or more visual objects for each of the predetermined velocity or speed ranges during the second set of successive trials, the velocity or speed of the head of the subject being measured by the motion sensing device;

compute a maximum head velocity or head speed at which the subject is capable of correctly identifying one or more configurations of the one or more visual objects; and

generate a quantitative assessment of gaze stabilization based upon the computed maximum head velocity or head speed at which the subject is capable of correctly identifying one or more configurations of the one or more visual objects.

13. The system according to claim 12, wherein the one or more visual objects displayed on the output screen of the visual display device comprise one or more optotypes, the one or more optotypes comprising at least one of: (i) a Tumbling E, (ii) a Landolt C, (iii) different letters of a recognized alphabet, and (iv) any other identifiable symbol.

14. The system according to claim 12, wherein the second initial size of the one or more visual objects is equal to the first initial size of the one or more visual objects or the second initial size of the one or more visual objects is larger than the first initial size of the one or more visual objects.

15. The system according to claim 12, wherein, during the second set of successive trials, the data processing device is further specially programmed to generate and display a visual indicator on the output screen of the visual display device that indicates whether or not the velocity or speed at which the subject's head is being displaced lies within the predetermined range.

16. The system according to claim 12, further comprising an auditory output device operatively coupled to the data processing device; and wherein, during the second set of successive trials, the data processing device is further specially programmed to generate and output an audible cue configured to assist the subject in achieving a head velocity or speed that lies within the predetermined range.

17. The system according to claim 12, wherein the one or more configurations of the one or more visual objects displayed on the output screen of the visual display device by the data processing device comprise a series of different visual objects displayed in succession on the output screen of the visual display device.

18. A method for testing the vision of a subject, said method comprising the steps of:

providing a motion sensing device, the motion sensing device configured to measure a velocity or speed of the head of the subject;

providing a visual display device having an output screen, the visual display device configured to display one or more visual objects on the output screen so that the one or more visual objects are visible to the subject;

providing a data processing device, the data processing device operatively coupled to the motion sensing device and the visual display device;

positioning the subject in front of the output screen of the visual display device such that one or more visual objects are visible to the subject;

displaying one or more configurations of the one or more visual objects having a first initial size on the output screen of the visual display device while the subject maintains a generally fixed position of his or her head;

determining, by using the data processing device, whether or not the subject correctly identifies the one or more configurations of the one or more visual objects having the first initial size;

incrementally decreasing and/or increasing the size of the one or more visual objects on the output screen of the visual display device using the data processing device during a first set of successive trials, and determining

whether or not the subject correctly identifies one or more configurations of each of the differently sized visual objects during the first set of successive trials;

determining, by using the data processing device, a size parameter of a first threshold version of the one or more visual objects based upon a performance of the subject during the first set of successive trials during which the subject maintains the generally fixed position of his or her head, wherein the determination of the size parameter of the first threshold version of the one or more visual objects does not require the exact distance between the subject and the visual display device to be measured or determined;

displaying one or more configurations of the one or more visual objects having a second initial size on the output screen of the visual display device when the subject's head undergoes displacement at a velocity or speed within a predetermined range as measured by the motion sensing device;

determining, by using the data processing device, whether or not the subject correctly identifies the one or more configurations of the one or more visual objects having the second initial size;

incrementally decreasing and/or increasing the size of the one or more visual objects on the output screen of the visual display device using the data processing device during a second set of successive trials, and determining whether or not the subject correctly identifies one or more configurations of each of the differently sized visual objects during the second set of successive trials when the subject's head undergoes displacement at a velocity or speed within the predetermined range as measured by the motion sensing device;

determining, by using the data processing device, a size parameter of a second threshold version of the one or more visual objects based upon a performance of the subject during the second set of successive trials during which the subject's head undergoes displacement;

comparing, by using the data processing device, the size parameter of the second threshold version of the one or more visual objects to the size parameter of the first threshold version of the one or more visual objects;

generating, by using the data processing device, a quantitative assessment of dynamic visual acuity loss using the size parameters of the first and second threshold versions of the one or more visual objects;

outputting the quantitative assessment of dynamic visual acuity loss of the subject on the output screen of the visual display device;

displaying one or more configurations of the one or more visual objects having a third initial size on the output screen of the visual display device when the subject's head undergoes displacement within a predetermined range as measured by the motion sensing device,

determining, by using the data processing device, whether or not the subject correctly identifies the one or more configurations of the one or more visual objects having the third initial size;

incrementally decreasing and/or increasing, using the data processing device, the predetermined velocity or speed range within which the subject's head is to be displaced while identifying one or more configurations of the one or more visual objects during a third set of successive trials, and determining whether or not the subject correctly identifies the one or more configurations of the one or more visual objects for each of the predetermined velocity or speed ranges during the third set of successive trials, the velocity or speed of the head of the subject being measured by the motion sensing device;

computing, by using the data processing device, a maximum head velocity or head speed at which the subject is capable of correctly identifying one or more configurations of the one or more visual objects;

generating, by using the data processing device, a quantitative assessment of gaze stabilization based upon the computed maximum head velocity or head speed at which the subject is capable of correctly identifying the one or more configurations of the one or more visual objects; and

outputting the quantitative assessment of gaze stabilization of the subject on the output screen of the visual display device.

19. The method according to claim **18**, wherein the one or more configurations of the one or more visual objects are only displayed on the output screen of the visual display device during the second set or third set of successive trials when the data processing device determines that the subject's head is undergoing displacement at a velocity or speed that lies within the predetermined range.

20. The method according to claim **18**, further comprising a user input device, the user input device configured to output an input signal in response to a manipulation of the user input device by a system user, the user input device being operatively coupled to the data processing device; and wherein the method further includes the step of:

inputting a response of the subject regarding the configuration of the one or more visual objects into the user input device, outputting an input signal from the user input device that is indicative of the response of the subject, and transmitting the input signal of the user input device to the data processing device so that the data processing device is capable of determining whether or not the subject has correctly identified a configuration of the one or more visual objects based upon the response of the subject.

21. The method according to claim **20**, wherein the user input device is configured to accept at least four different responses of a subject, each of the at least four different responses of the subject corresponding to a different configuration of the one or more visual objects.

22. The method according to claim **18**, further comprising the step of:

computing, by using the data processing device, the logarithm of the ratio of the size parameter of the second threshold version of the one or more visual objects to the size parameter of the first threshold version of the one or more visual objects.

23. The method according to claim **22**, wherein the computed logarithm comprises a base 10 logarithm.

24. The method according to claim **18**, wherein a static visual acuity of the subject is not determined in carrying out the steps of the method.

25. The method according to claim **18**, wherein an exact distance between the subject and the visual display device is not measured or determined in carrying out the steps of the method.

26. The method according to claim **18**, wherein a Snellen fraction is not determined in carrying out the steps of the method.

* * * * *